Service Manual

Created: 13 January 2015

X32

40-Input, 25-Bus Digital Mixing Console with 32 Programmable MIDAS Preamps, 25 Motorized Faders, Channel LCD's, 32-Channel Audio Interface and iPad/iPhone* Remote Control

Specifications 2
PCB Schematic 3
Parts List 74
Exploded Drawing 99

behringer.com

© 2015 MUSIC Group IP Ltd. All third party trademarks mentioned belong to their respective owners and are not affiliated with MUSIC Group IP Ltd. All information (including drawings and diagrams) contained in this document is the property of MUSIC Group IP Ltd., its subsidiaries or content providers, and is protected by intellectual property (copyright, trademark, patents, etc) laws, international treaty provisions and other laws. Any unauthorized disclosure, use, application, reproduction, modification, lease, sale, transmission or any other dealings in the information may violate applicable laws and result in civil and/or (where applicable) criminal liabilities and penalties.

X32
Specifications

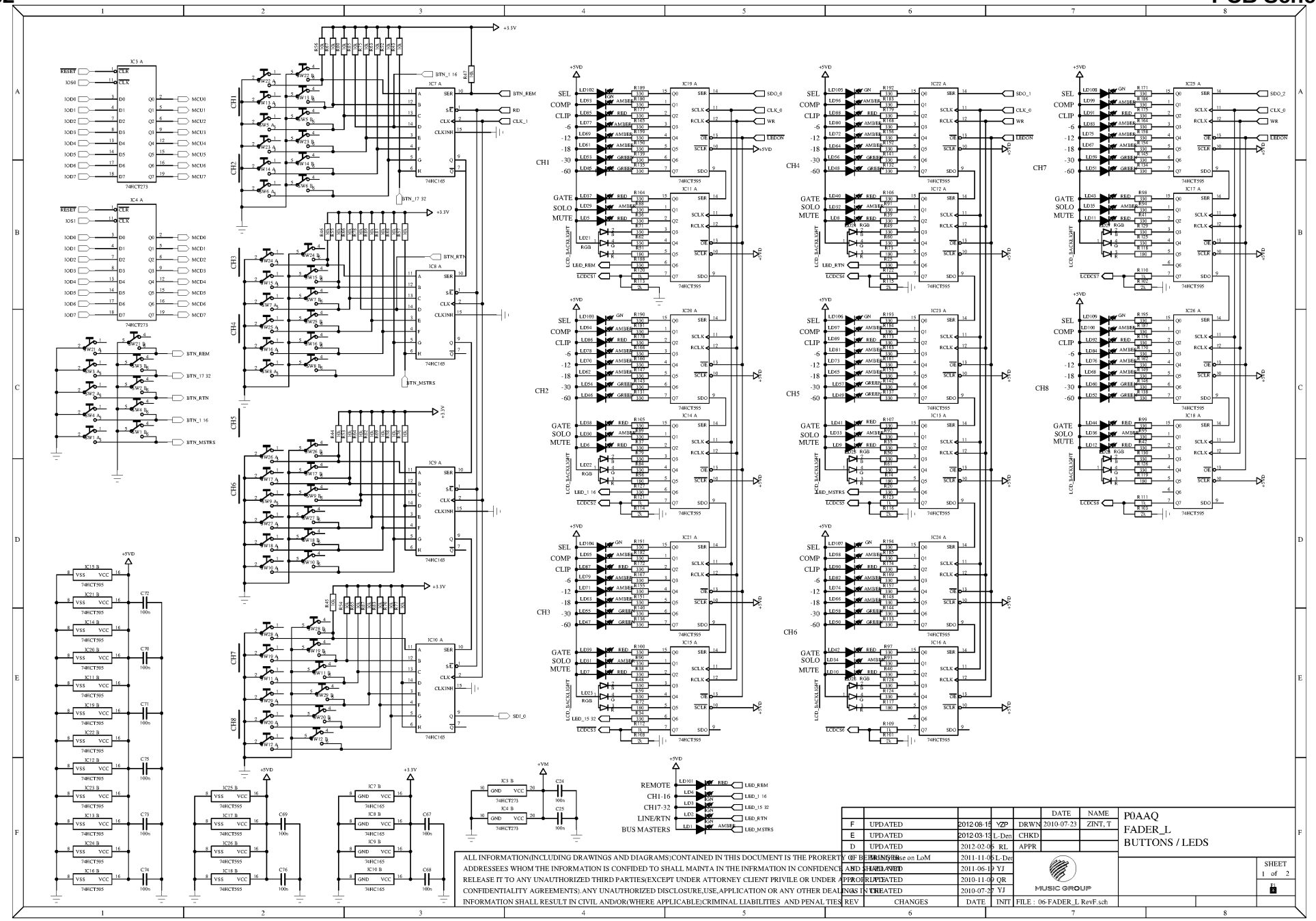
P0AAQ
FADER_L
BUTTONS / LEDS
SHEET 1 of 2
MUSIC GROUP
FILE : 06-FADER_L RevF.sch
ALL INFORMATION(INCLUDING DRAWINGS AND DIAGRAMS)CONTAINED IN THIS DOCUMENT IS THE PRORERTY OF BEHRINGER
ADDRESSEES WHOM THE INFORMATION IS CONFIDED TO SHALL MAINTA IN THE INFRMATION IN CONFIDENCE AND SHALL NOT
RELEASE IT TO ANY UNAUTHORIZED THIRD PARTIES(EXCEPT UNDER ATTORNEY CLIENT PRIVILE OR UNDER APPROPRIATE
CONFIDENTIALITY AGREEMENTS), ANY UNAUTHORIZED DISCLOSURE,USE,APPLICATION OR ANY OTHER DEALINGS IN THE
INFORMATION SHALL RESULT IN CIVIL AND/OR(WHERE APPLICABLE)CRIMINAL LIABILITIES AND PENAL TIES

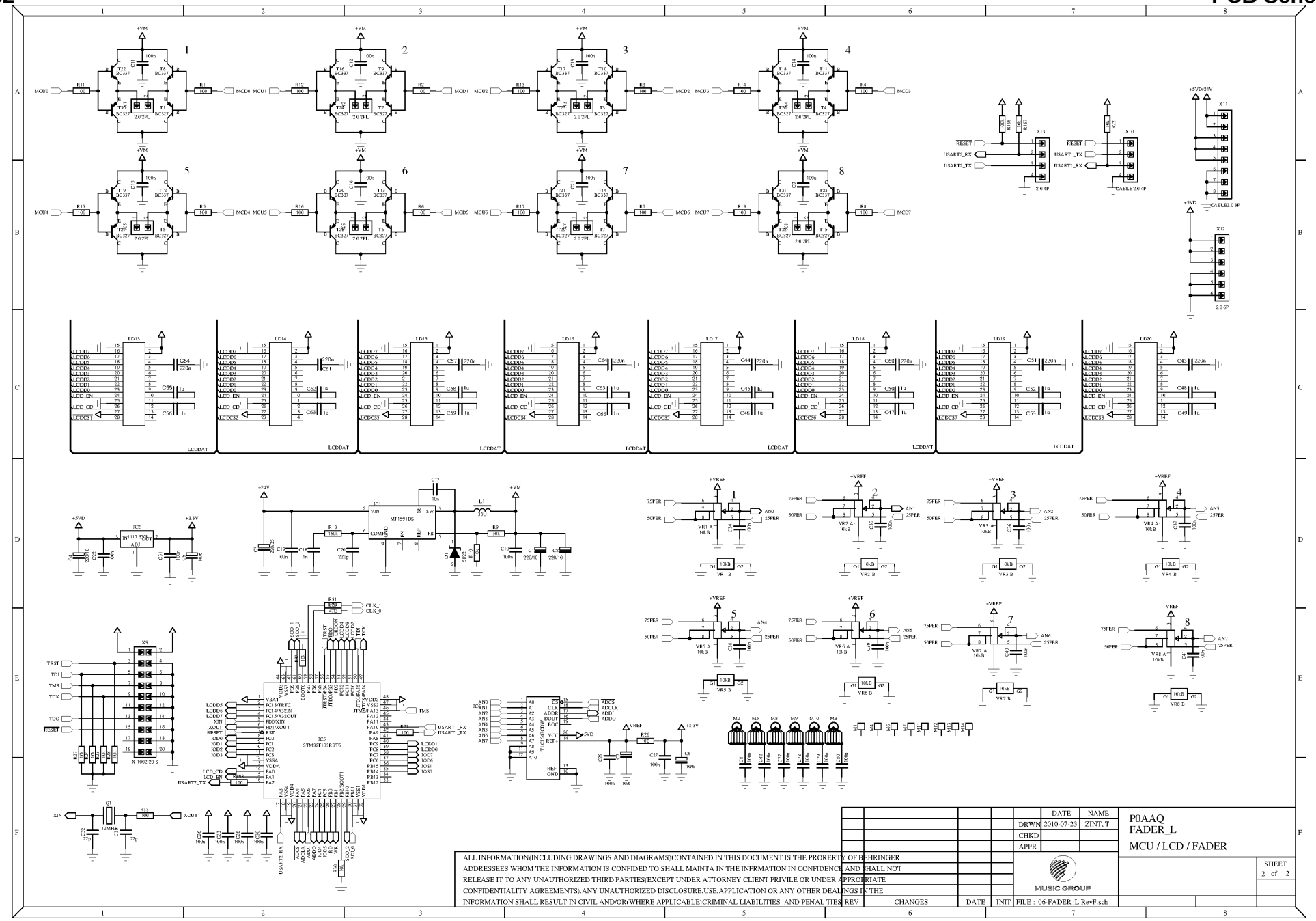
ALL INFORMATION(INCLUDING DRAWINGS AND DIAGRAMS)CONTAINED IN THIS DOCUMENT IS THE PRORERTY OF BEHRINGER
ADDRESSEES WHOM THE INFORMATION IS CONFIDED TO SHALL MAINTA IN THE INFRMATION IN CONFIDENCE AND SHALL NOT
RELEASE IT TO ANY UNAUTHORIZED THIRD PARTIES(EXCEPT UNDER ATTORNEY CLIENT PRIVILE OR UNDER APPROPRIATE
CONFIDENTIALITY AGREEMENTS).ANY UNAUTHORIZED DISCLOSURE,USE,APPLICATION OR ANY OTHER DEALINGS IN THE
INFORMATION SHALL RESULT IN CIVIL AND/OR(WHERE APPLICABLE)CRIMINAL LIABILITIES AND PENAL TIES
REV
CHANGES
DATE
INIT
FILE : 06-FADER_L RevF.sch
DATE
NAME
DRWN 2010-07-23 ZINT, T
CHKD
APPR
MUSIC GROUP
P0AAQ
FADER_L
MCU / LCD / FADER
SHEET
2 of 2

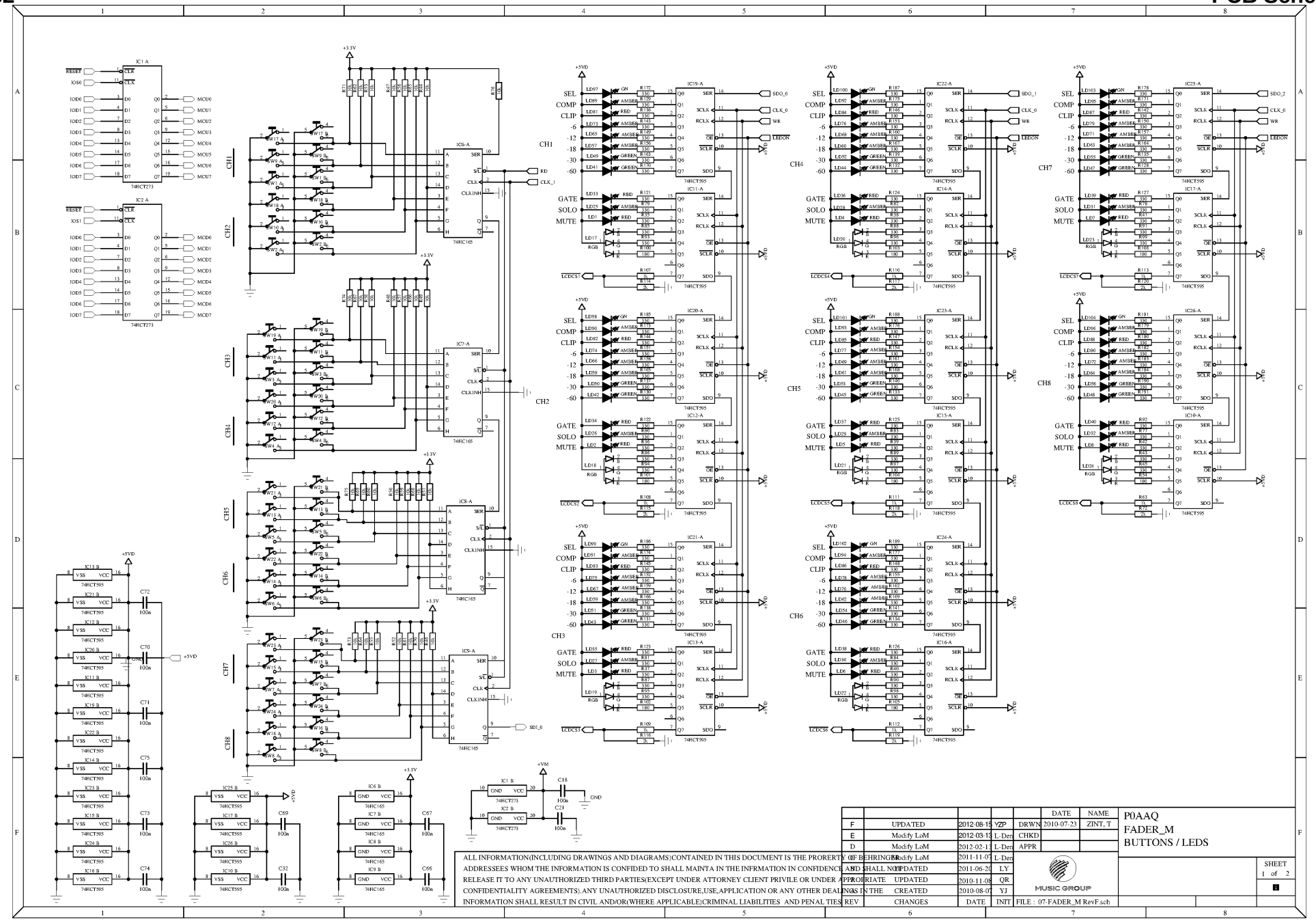
P0AAQ
FADER_M
BUTTONS / LEDS
SHEET 1 of 2
DRWN 2010-07-23 ZINT, T
CHKD
APPR
FILE : 07-FADER_M RevF.sch
MUSIC GROUP
ALL INFORMATION(INCLUDING DRAWINGS AND DIAGRAMS)CONTAINED IN THIS DOCUMENT IS THE PRORERTY OF BEHRINGER AND SHALL NOT BE DISCLOSED TO ADDRESSEES WHOM THE INFORMATION IS CONFIDED TO SHALL MAINTA IN THE INFRMATION IN CONFIDENCE AND SHALL NOT USE IT FOR ANY OTHER PURPOSE OR RELEASE IT TO ANY UNAUTHORIZED THIRD PARTIES(EXCEPT UNDER ATTORNEY CLIENT PRIVILE OR UNDER APPROPRIATE CONFIDENTIALITY AGREEMENTS).ANY UNAUTHORIZED DISCLOSURE,USE,APPLICATION OR ANY OTHER DEALINGS IN THE INFORMATION SHALL RESULT IN CIVIL AND/OR(WHERE APPLICABLE)CRIMINAL LIABILITIES AND PENAL TIES

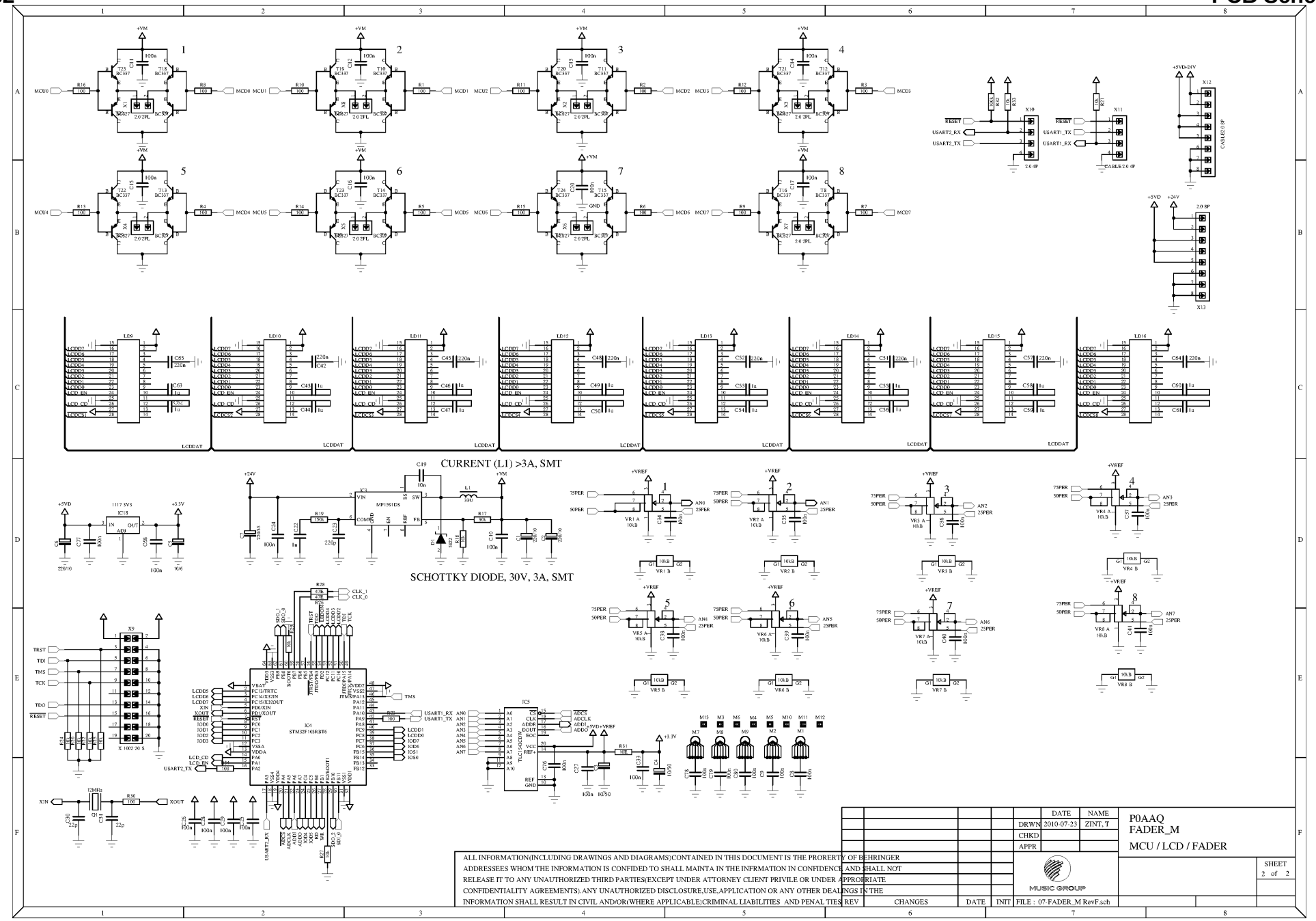
CURRENT (L1) >3A, SMT
SCHOTTKY DIODE, 30V, 3A, SMT
ALL INFORMATION(INCLUDING DRAWINGS AND DIAGRAMS)CONTAINED IN THIS DOCUMENT IS THE PRORERTY OF BEHRINGER
ADDRESSEES WHOM THE INFORMATION IS CONFIDED TO SHALL MAINTA IN THE INFRMATION IN CONFIDENCE AND SHALL NOT
RELEASE IT TO ANY UNAUTHORIZED THIRD PARTIES(EXCEPT UNDER ATTORNEY CLIENT PRIVILE OR UNDER APPROPRIATE
CONFIDENTIALITY AGREEMENTS).ANY UNAUTHORIZED DISCLOSURE,USE,APPLICATION OR ANY OTHER DEALINGS IN THE
INFORMATION SHALL RESULT IN CIVIL AND/OR(WHERE APPLICABLE)CRIMINAL LIABILITIES AND PENAL TIES
REV
CHANGES
DATE
INIT
FILE : 07-FADER_M RevF.sch
DATE
NAME
DRWN 2010-07-23 ZINT, T
CHKD
APPR
MUSIC GROUP
P0AAQ
FADER_M
MCU / LCD / FADER
SHEET
2 of 2

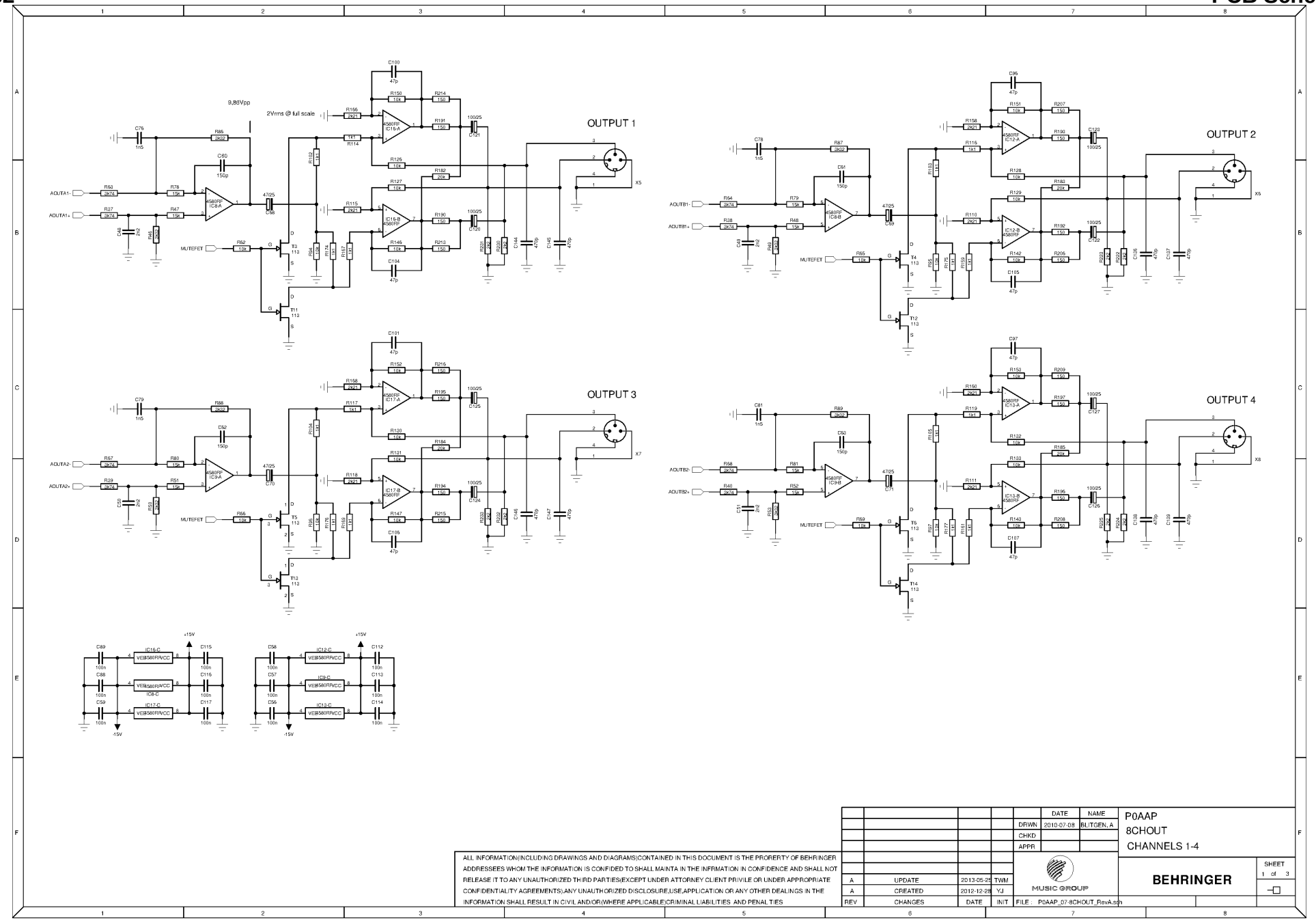
OUTPUT 1
OUTPUT 2
OUTPUT 3
OUTPUT 4
9,86Vpp
2Vrms @ full scale
AOUTA1-
AOUTA1+
AOUTB1-
AOUTB1+
AOUTA2-
AOUTA2+
AOUTB2-
AOUTB2+
MUTEFET
X5
X7
X8
+15V
-15V
P0AAP
8CHOUT
CHANNELS 1-4
DATE
NAME
DRWN 2010-07-08 BLITGEN, A
CHKD
APPR
BEHRINGER
MUSIC GROUP
SHEET 1 of 3
ALL INFORMATION(INCLUDING DRAWINGS AND DIAGRAMS)CONTAINED IN THIS DOCUMENT IS THE PROPERTY OF BEHRINGER
ADDRESSEES WHOM THE INFORMATION IS CONFIDED TO SHALL MAINTA IN THE INFRMATION IN CONFIDENCE AND SHALL NOT
RELEASE IT TO ANY UNAUTHORIZED THIRD PARTIES(EXCEPT UNDER ATTORNEY CLIENT PRIVILE OR UNDER APPROPRIATE
CONFIDENTIALITY AGREEMENTS),ANY UNAUTHORIZED DISCLOSURE,USE,APPLICATION OR ANY OTHER DEALINGS IN THE
INFORMATION SHALL RESULT IN CIVIL AND/OR(WHERE APPLICABLE)CRIMINAL LIABILITIES AND PENALTIES
A UPDATE 2013-05-25 TWM
A CREATED 2012-12-28 YJ
REV CHANGES DATE INIT
FILE : P0AAP_07-8CHOUT_RevA.sch

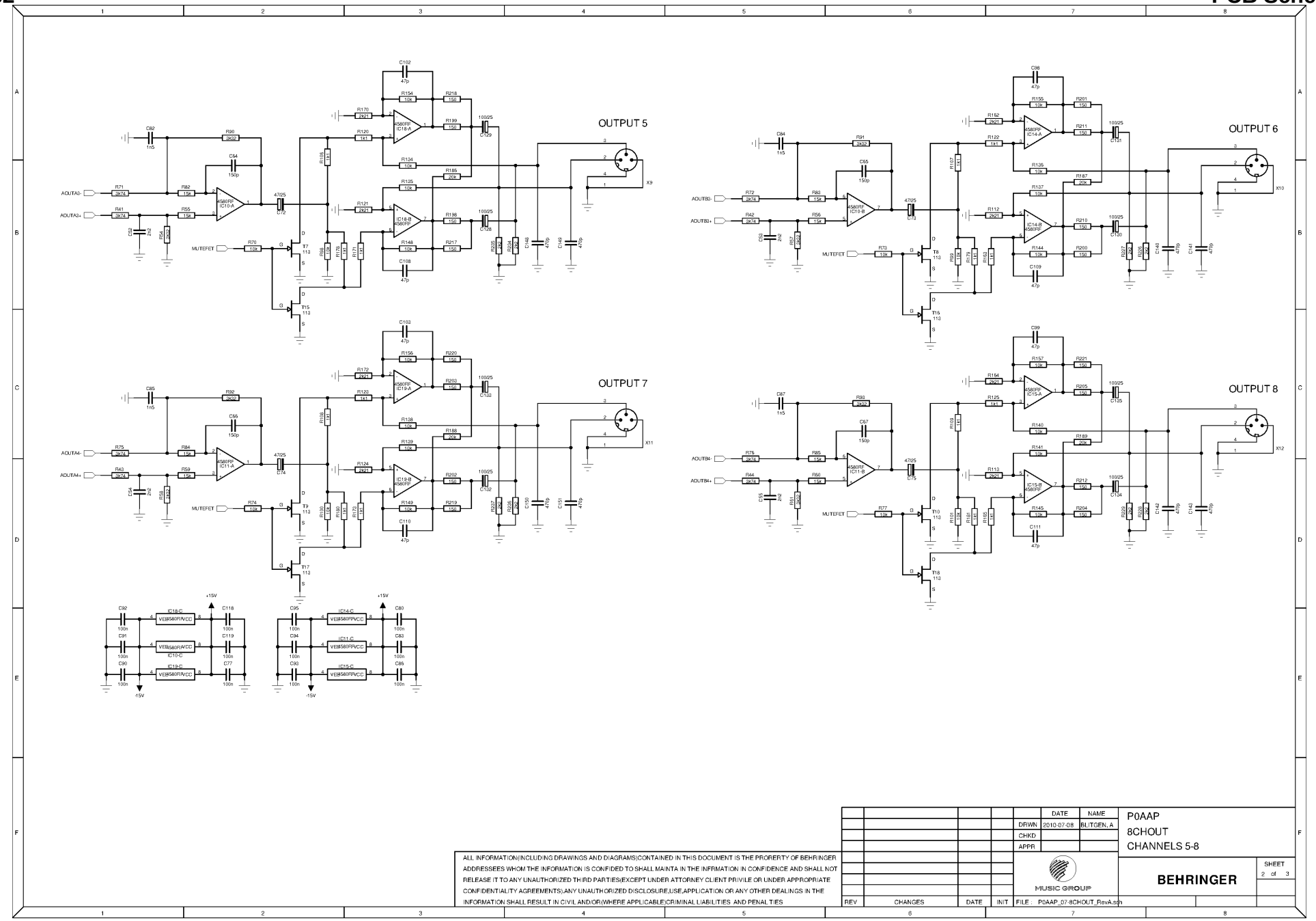

ALL INFORMATION(INCLUDING DRAWINGS AND DIAGRAMS)CONTAINED IN THIS DOCUMENT IS THE PROPERTY OF BEHRINGER ADDRESSEES WHOM THE INFORMATION IS CONFIDED TO SHALL MAINTA IN THE INFRMATION IN CONFIDENCE AND SHALL NOT RELEASE IT TO ANY UNAUTHORIZED THIRD PARTIES(EXCEPT UNDER ATTORNEY CLIENT PRIVILE OR UNDER APPROPRIATE CONFIDENTIALITY AGREEMENTS),ANY UNAUTHORIZED DISCLOSURE,USE,APPLICATION OR ANY OTHER DEALINGS IN THE INFORMATION SHALL RESULT IN CIVIL AND/OR(WHERE APPLICABLE)CRIMINAL LIABILITIES AND PENALTIES

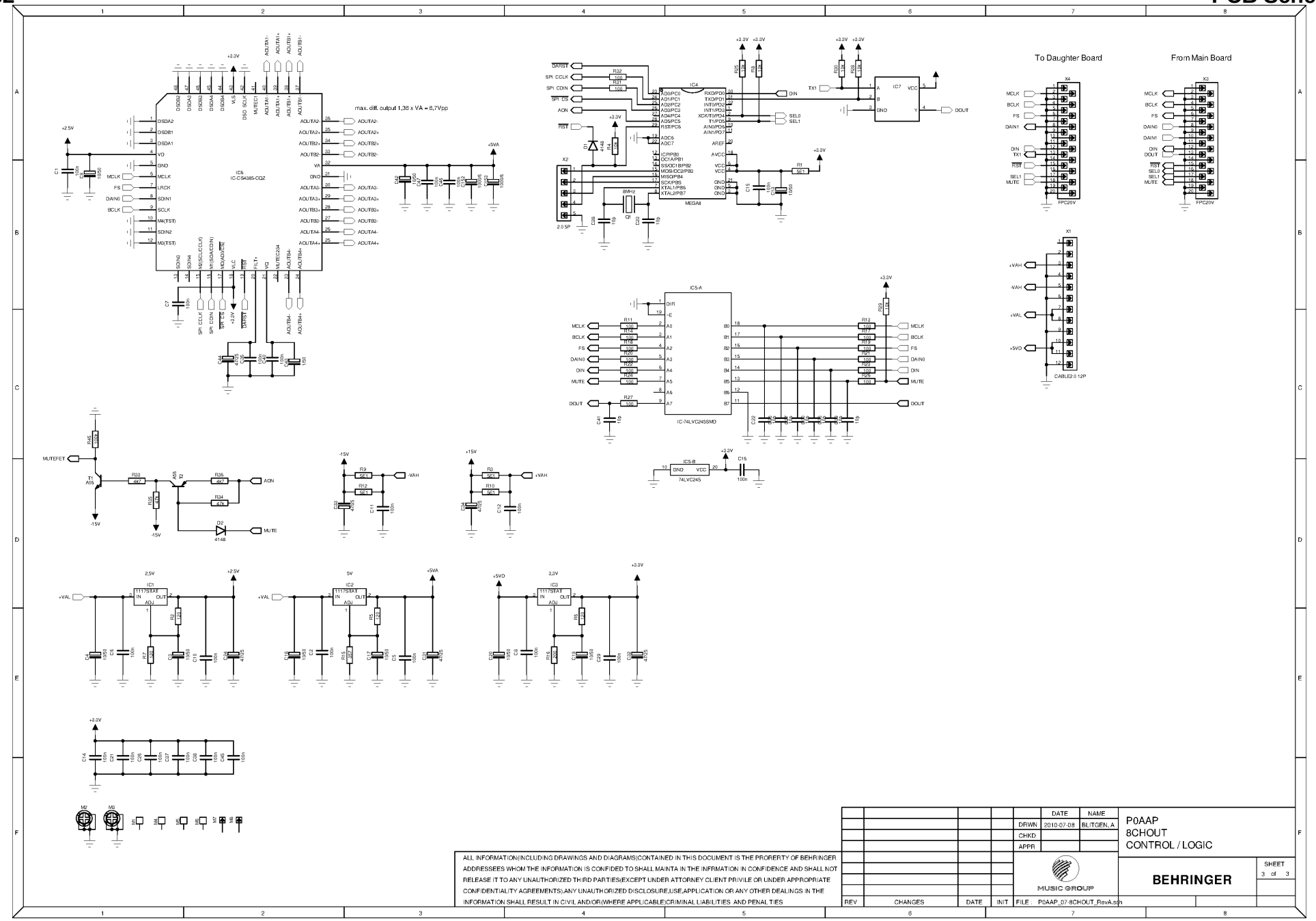
max. diff. output 1,38 x VA = 8,7Vpp
IC5
IC-CS4385-CQZ
IC4
MEGA8
IC7
IC5-A
IC-74LVC245SMD
IC5-B
74LVC245
IC1
IC2
IC3
1117STAT
To Daughter Board
From Main Board
X4
X3
X2
X1
FPC20V
CABLE2.0 12P
MUTEFET
AON
MUTE
DOUT
DIN
MCLK
BCLK
FS
DAIN0
DAIN1
+VAH
-VAH
+VAL
+5VD
+5VA
+2.5V
+3.3V
+15V
-15V
2,5V
5V
3,3V
DATE
NAME
DRWN
2010-07-08
BLITGEN, A
CHKD
APPR
P0AAP
8CHOUT
CONTROL / LOGIC
BEHRINGER
MUSIC GROUP
SHEET
3 of 3
ALL INFORMATION(INCLUDING DRAWINGS AND DIAGRAMS)CONTAINED IN THIS DOCUMENT IS THE PROPERTY OF BEHRINGER ADDRESSEES WHOM THE INFORMATION IS CONFIDED TO SHALL MAINTA IN THE INFRMATION IN CONFIDENCE AND SHALL NOT RELEASE IT TO ANY UNAUTHORIZED THIRD PARTIES(EXCEPT UNDER ATTORNEY CLIENT PRIVILE OR UNDER APPROPRIATE CONFIDENTIALITY AGREEMENTS),ANY UNAUTHORIZED DISCLOSURE,USE,APPLICATION OR ANY OTHER DEALINGS IN THE INFORMATION SHALL RESULT IN CIVIL AND/OR(WHERE APPLICABLE)CRIMINAL LIABILITIES AND PENALTIES
REV
CHANGES
DATE
INIT
FILE : P0AAP_07-8CHOUT_RevA.sch

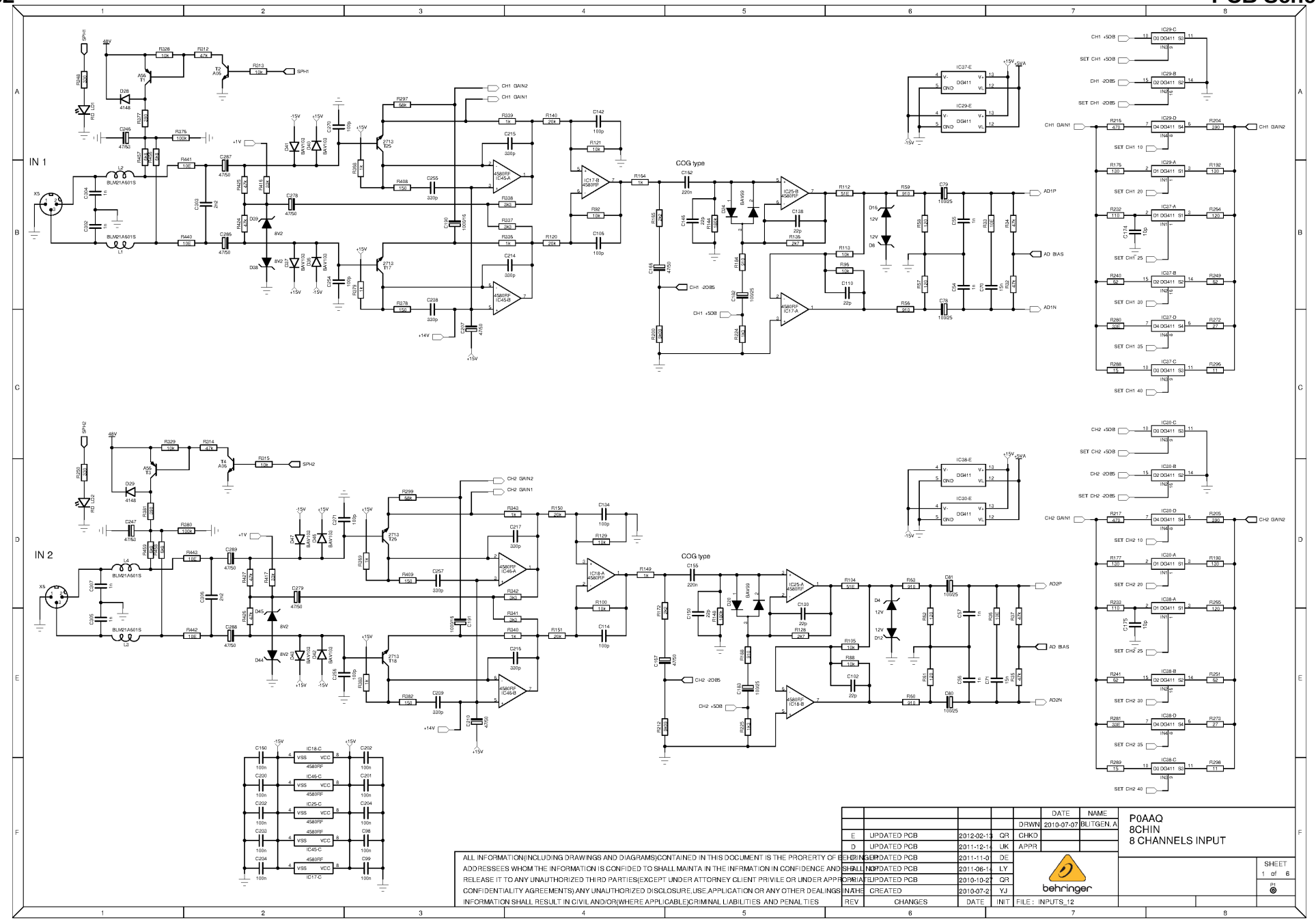
IN 1
IN 2
COG type
COG type
AD1P
AD1N
AD2P
AD2N
AD BIAS
AD BIAS
CH1 GAIN1
CH1 GAIN2
CH2 GAIN1
CH2 GAIN2
SPH1
SPH2
ALL INFORMATION(INCLUDING DRAWINGS AND DIAGRAMS)CONTAINED IN THIS DOCUMENT IS THE PRORERTY OF BEHRINGER
ADDRESSEES WHOM THE INFORMATION IS CONFIDED TO SHALL MAINTA IN THE INFRMATION IN CONFIDENCE AND SHALL NOT
RELEASE IT TO ANY UNAUTHORIZED THIRD PARTIES(EXCEPT UNDER ATTORNEY CLIENT PRIVILE OR UNDER APPROPRIATE
CONFIDENTIALITY AGREEMENTS).ANY UNAUTHORIZED DISCLOSURE,USE,APPLICATION OR ANY OTHER DEALINGS IN THE
INFORMATION SHALL RESULT IN CIVIL AND/OR(WHERE APPLICABLE)CRIMINAL LIABILITIES AND PENALTIES
REV CHANGES DATE INIT
E UPDATED PCB 2012-02-13 QR
D UPDATED PCB 2011-12-14 UK
UPDATED PCB 2011-11-0 DE
UPDATED PCB 2011-06-14 LY
UPDATED PCB 2010-10-27 QR
CREATED 2010-07-2 YJ
FILE : INPUTS_12
DATE NAME
DRWN 2010-07-07 BLITGEN, A
CHKD
APPR
P0AAQ
8CHIN
8 CHANNELS INPUT
SHEET 1 of 6
behringer

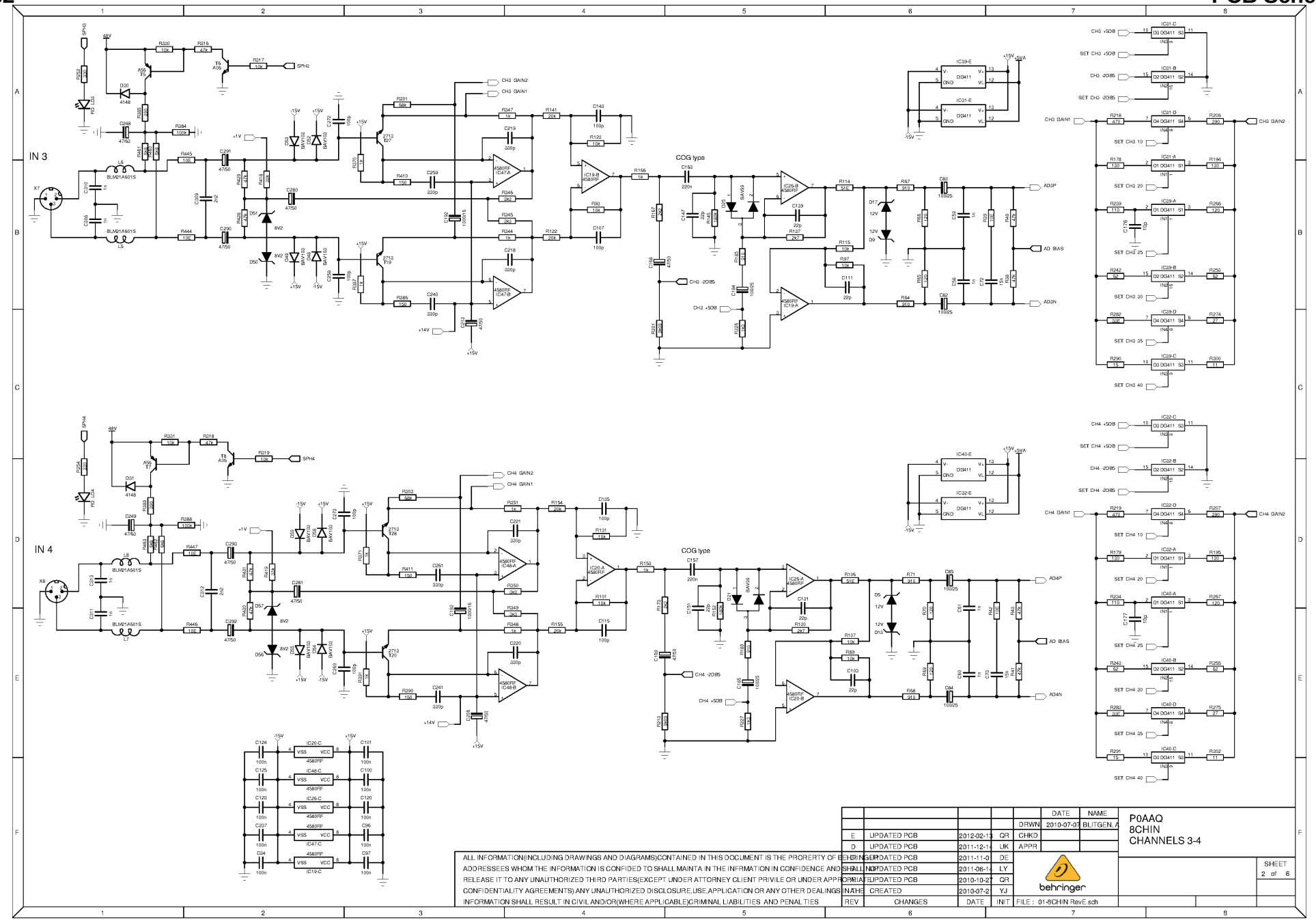

ALL INFORMATION(INCLUDING DRAWINGS AND DIAGRAMS)CONTAINED IN THIS DOCUMENT IS THE PRORERTY OF BEHRINGER
ADDRESSEES WHOM THE INFORMATION IS CONFIDED TO SHALL MAINTA IN THE INFRMATION IN CONFIDENCE AND SHALL NOT
RELEASE IT TO ANY UNAUTHORIZED THIRD PARTIES(EXCEPT UNDER ATTORNEY CLIENT PRIVILE OR UNDER APPROPRIATE
CONFIDENTIALITY AGREEMENTS).ANY UNAUTHORIZED DISCLOSURE,USE,APPLICATION OR ANY OTHER DEALINGS IN THE
INFORMATION SHALL RESULT IN CIVIL AND/OR(WHERE APPLICABLE)CRIMINAL LIABILITIES AND PENALTIES

REV	CHANGES	DATE	INIT
E	UPDATED PCB	2012-02-13	QR
D	UPDATED PCB	2011-12-14	UK
C	UPDATED PCB	2011-11-03	DE
B	UPDATED PCB	2011-06-14	LY
A	UPDATED PCB	2010-10-27	QR
	CREATED	2010-07-2	YJ

	DATE	NAME
DRWN	2010-07-07	BLITGEN, A
CHKD		
APPR		

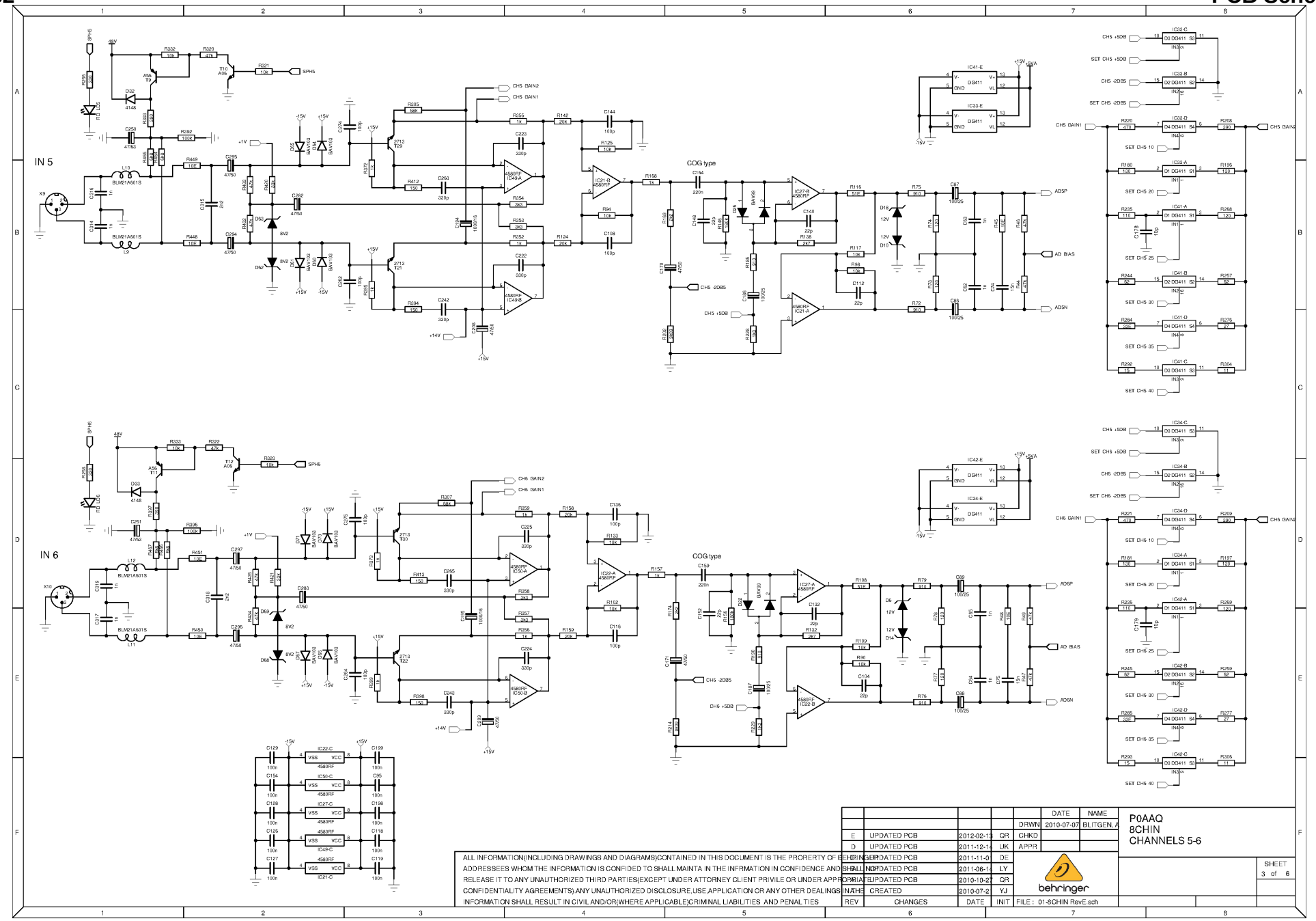
IN 5
IN 6
COG type
COG type
CH5 GAIN1
CH5 GAIN2
CH6 GAIN1
CH6 GAIN2
AD5P
AD5N
AD6P
AD6N
AD BIAS
P0AAQ
8CHIN
CHANNELS 5-6
SHEET 3 of 6
FILE : 01-8CHIN RevE.sch
UPDATED PCB
CREATED
ALL INFORMATION(INCLUDING DRAWINGS AND DIAGRAMS)CONTAINED IN THIS DOCUMENT IS THE PRORERTY OF BEHRINGER
ADDRESSEES WHOM THE INFORMATION IS CONFIDED TO SHALL MAINTA IN THE INFRMATION IN CONFIDENCE AND SHALL NOT
RELEASE IT TO ANY UNAUTHORIZED THIRD PARTIES(EXCEPT UNDER ATTORNEY CLIENT PRIVILE OR UNDER APPROPRIATE
CONFIDENTIALITY AGREEMENTS).ANY UNAUTHORIZED DISCLOSURE,USE,APPLICATION OR ANY OTHER DEALINGS IN THE
INFORMATION SHALL RESULT IN CIVIL AND/OR(WHERE APPLICABLE)CRIMINAL LIABILITIES AND PENALTIES

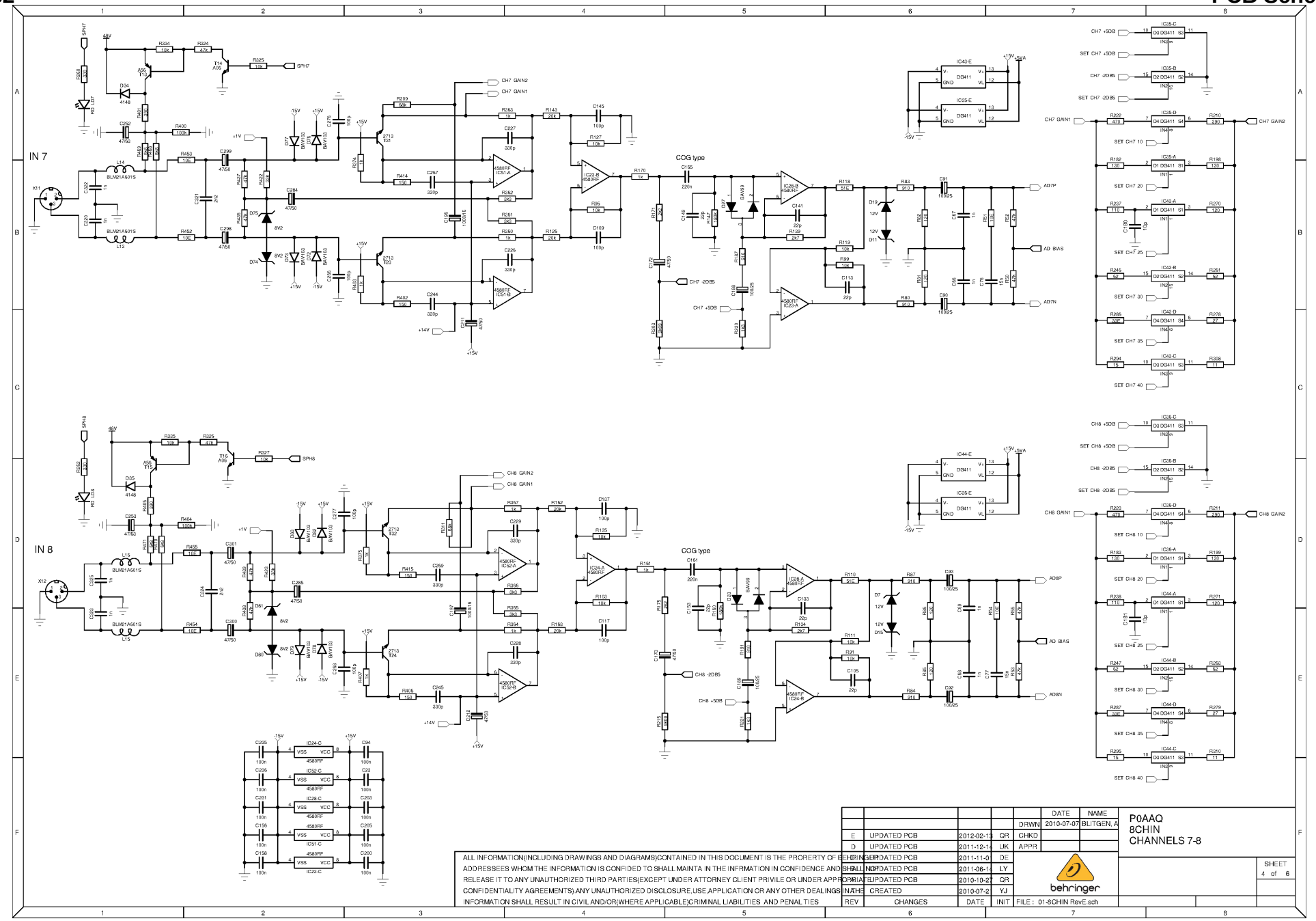
IN 7
IN 8
COG type
COG type
CH7 GAIN1
CH7 GAIN2
CH8 GAIN1
CH8 GAIN2
AD7P
AD7N
AD8P
AD8N
AD BIAS
P0AAQ
8CHIN
CHANNELS 7-8
SHEET 4 of 6
DRWN 2010-07-07 BLITGEN, A
CHKD
APPR
E UPDATED PCB 2012-02-13 QR
D UPDATED PCB 2011-12-14 UK
C UPDATED PCB 2011-11-03 DE
B UPDATED PCB 2011-06-14 LY
A UPDATED PCB 2010-10-27 QR
CREATED 2010-07-2 YJ
REV CHANGES DATE INIT
FILE : 01-8CHIN RevE.sch
ALL INFORMATION(INCLUDING DRAWINGS AND DIAGRAMS)CONTAINED IN THIS DOCUMENT IS THE PRORERTY OF BEHRINGER
ADDRESSEES WHOM THE INFORMATION IS CONFIDED TO SHALL MAINTA IN THE INFRMATION IN CONFIDENCE AND SHALL NOT
RELEASE IT TO ANY UNAUTHORIZED THIRD PARTIES(EXCEPT UNDER ATTORNEY CLIENT PRIVILE OR UNDER APPROPRIATE
CONFIDENTIALITY AGREEMENTS).ANY UNAUTHORIZED DISCLOSURE,USE,APPLICATION OR ANY OTHER DEALINGS IN THE
INFORMATION SHALL RESULT IN CIVIL AND/OR(WHERE APPLICABLE)CRIMINAL LIABILITIES AND PENALTIES

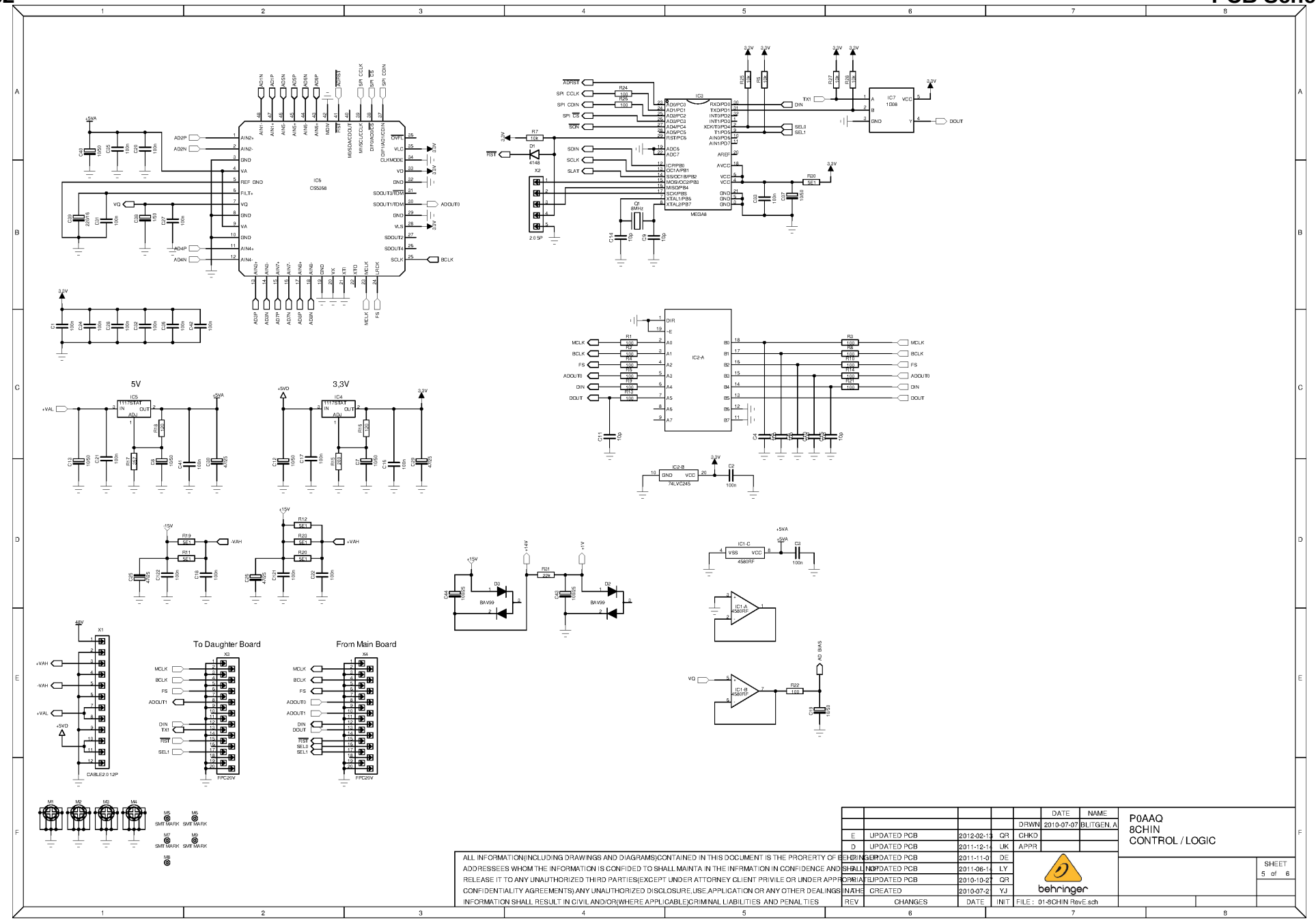

ALL INFORMATION(INCLUDING DRAWINGS AND DIAGRAMS)CONTAINED IN THIS DOCUMENT IS THE PRORERTY OF BEHRINGER AND ADDRESSEES WHOM THE INFORMATION IS CONFIDED TO SHALL MAINTA IN THE INFRMATION IN CONFIDENCE AND SHALL NOT RELEASE IT TO ANY UNAUTHORIZED THIRD PARTIES(EXCEPT UNDER ATTORNEY CLIENT PRIVILE OR UNDER APPROPRIATE CONFIDENTIALITY AGREEMENTS).ANY UNAUTHORIZED DISCLOSURE,USE,APPLICATION OR ANY OTHER DEALINGS IN THE INFORMATION SHALL RESULT IN CIVIL AND/OR(WHERE APPLICABLE)CRIMINAL LIABILITIES AND PENALTIES

REV	CHANGES	DATE	INIT
E	UPDATED PCB	2012-02-13	QR
D	UPDATED PCB	2011-12-14	UK
C	UPDATED PCB	2011-11-03	DE
B	UPDATED PCB	2011-06-14	LY
A	UPDATED PCB	2010-10-27	QR
	CREATED	2010-07-27	YJ

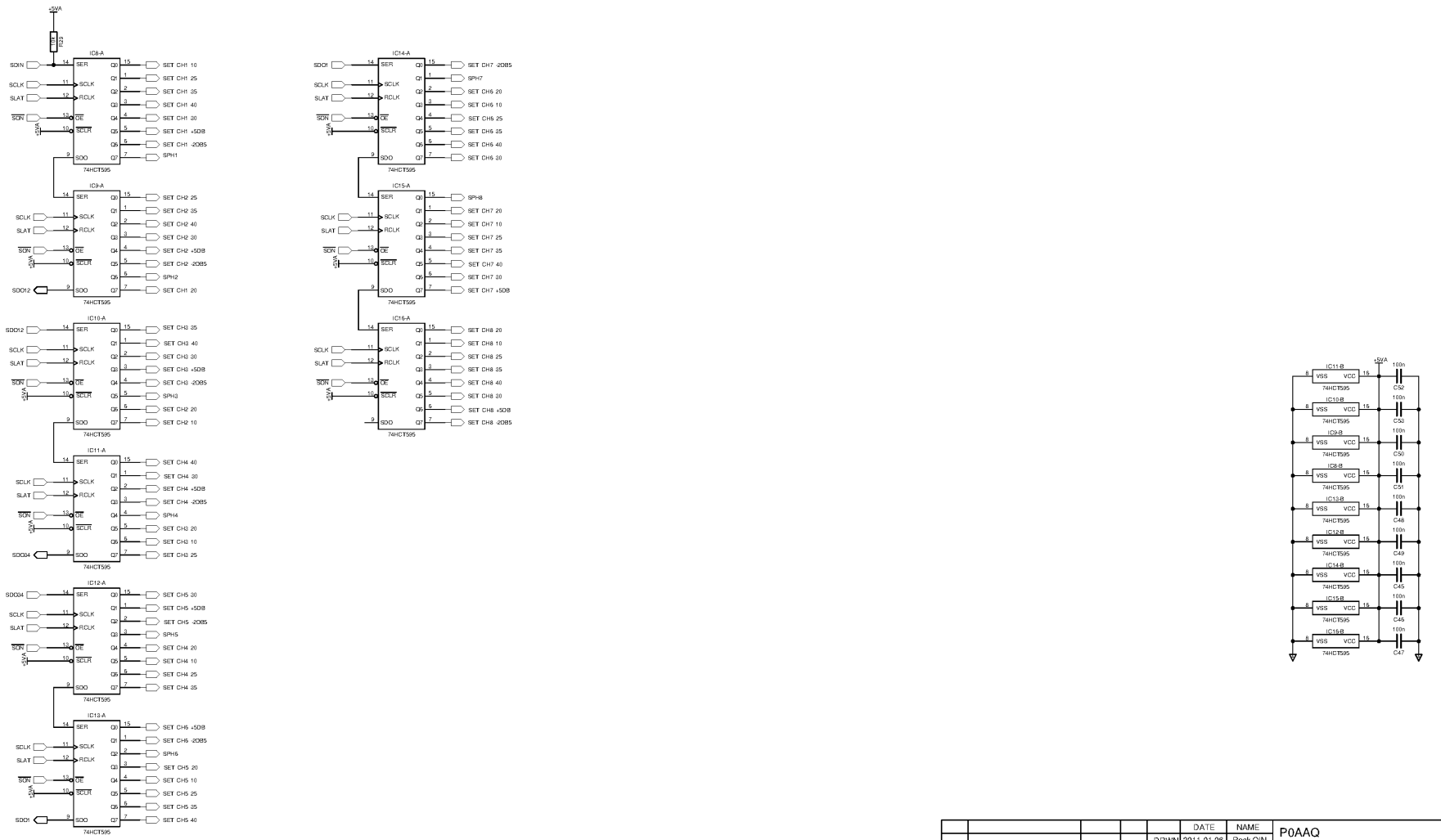

REV	CHANGES	DATE	INIT
E	UPDATED PCB	2012-02-13	QR
D	UPDATED PCB	2011-12-14	UK
C	UPDATED PCB	2011-11-03	DE
B	UPDATED PCB	2011-06-14	LY
A	UPDATED PCB	2010-10-27	QR
	CHANGES NOTICE	2011-01-06	QR

	DATE	NAME
DRWN	2011-01-06	Rack QIN
CHKD		
APPR		

P0AAQ
8CHIN
CONTROL

BEHRINGER

SHEET 6 of 6

FILE : CONTROL

ALL INFORMATION(INCLUDING DRAWINGS AND DIAGRAMS)CONTAINED IN THIS DOCUMENT IS THE PRORERTY OF BEHRINGER ADDRESSEES WHOM THE INFORMATION IS CONFIDED TO SHALL MAINTA IN THE INFRMATION IN CONFIDENCE AND SHALL NOT RELEASE IT TO ANY UNAUTHORIZED THIRD PARTIES(EXCEPT UNDER ATTORNEY CLIENT PRIVILE OR UNDER APPROPRIATE CONFIDENTIALITY AGREEMENTS).ANY UNAUTHORIZED DISCLOSURE,USE,APPLICATION OR ANY OTHER DEALINGS IN THE INFORMATION SHALL RESULT IN CIVIL AND/OR(WHERE APPLICABLE)CRIMINAL LIABILITIES AND PENALTIES

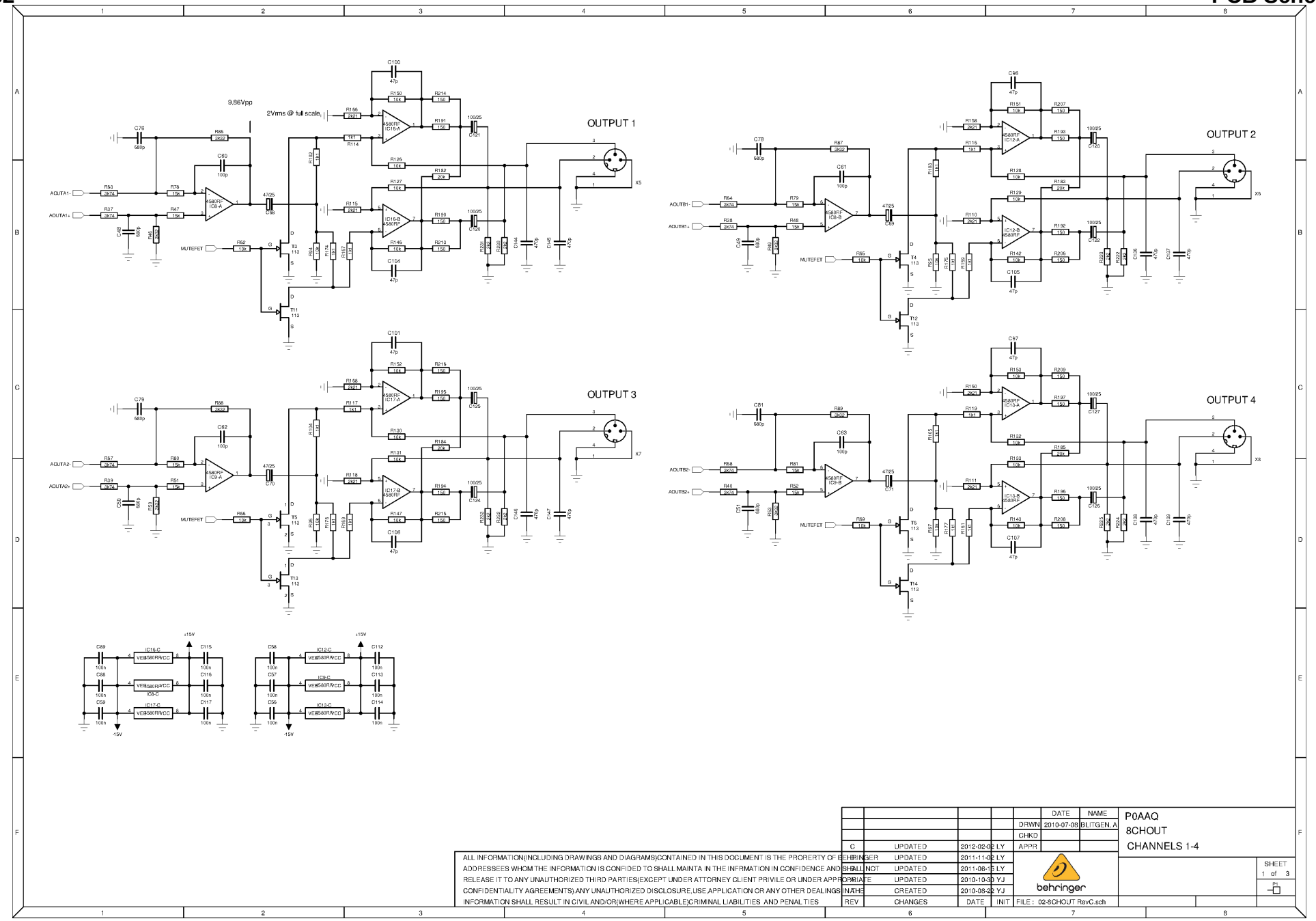
OUTPUT 1
OUTPUT 2
OUTPUT 3
OUTPUT 4
9,86Vpp
2Vrms @ full scale
AOUTA1-
AOUTA1+
AOUTB1-
AOUTB1+
AOUTA2-
AOUTA2+
AOUTB2-
AOUTB2+
MUTEFET
+15V
-15V
P0AAQ
8CHOUT
CHANNELS 1-4
DRWN 2010-07-08 BLITGEN, A
CHKD
APPR
SHEET 1 of 3
FILE : 02-8CHOUT RevC.sch
ALL INFORMATION(INCLUDING DRAWINGS AND DIAGRAMS)CONTAINED IN THIS DOCUMENT IS THE PRORERTY OF BEHRINGER
ADDRESSEES WHOM THE INFORMATION IS CONFIDED TO SHALL MAINTA IN THE INFRMATION IN CONFIDENCE AND SHALL NOT
RELEASE IT TO ANY UNAUTHORIZED THIRD PARTIES(EXCEPT UNDER ATTORNEY CLIENT PRIVILE OR UNDER APPROPRIATE
CONFIDENTIALITY AGREEMENTS).ANY UNAUTHORIZED DISCLOSURE,USE,APPLICATION OR ANY OTHER DEALINGS IN THE
INFORMATION SHALL RESULT IN CIVIL AND/OR(WHERE APPLICABLE)CRIMINAL LIABILITIES AND PENALTIES
C UPDATED 2012-02-02 LY
B UPDATED 2011-11-02 LY
A UPDATED 2011-06-15 LY
UPDATED 2010-10-30 YJ
CREATED 2010-08-22 YJ
REV CHANGES DATE INIT
behringer

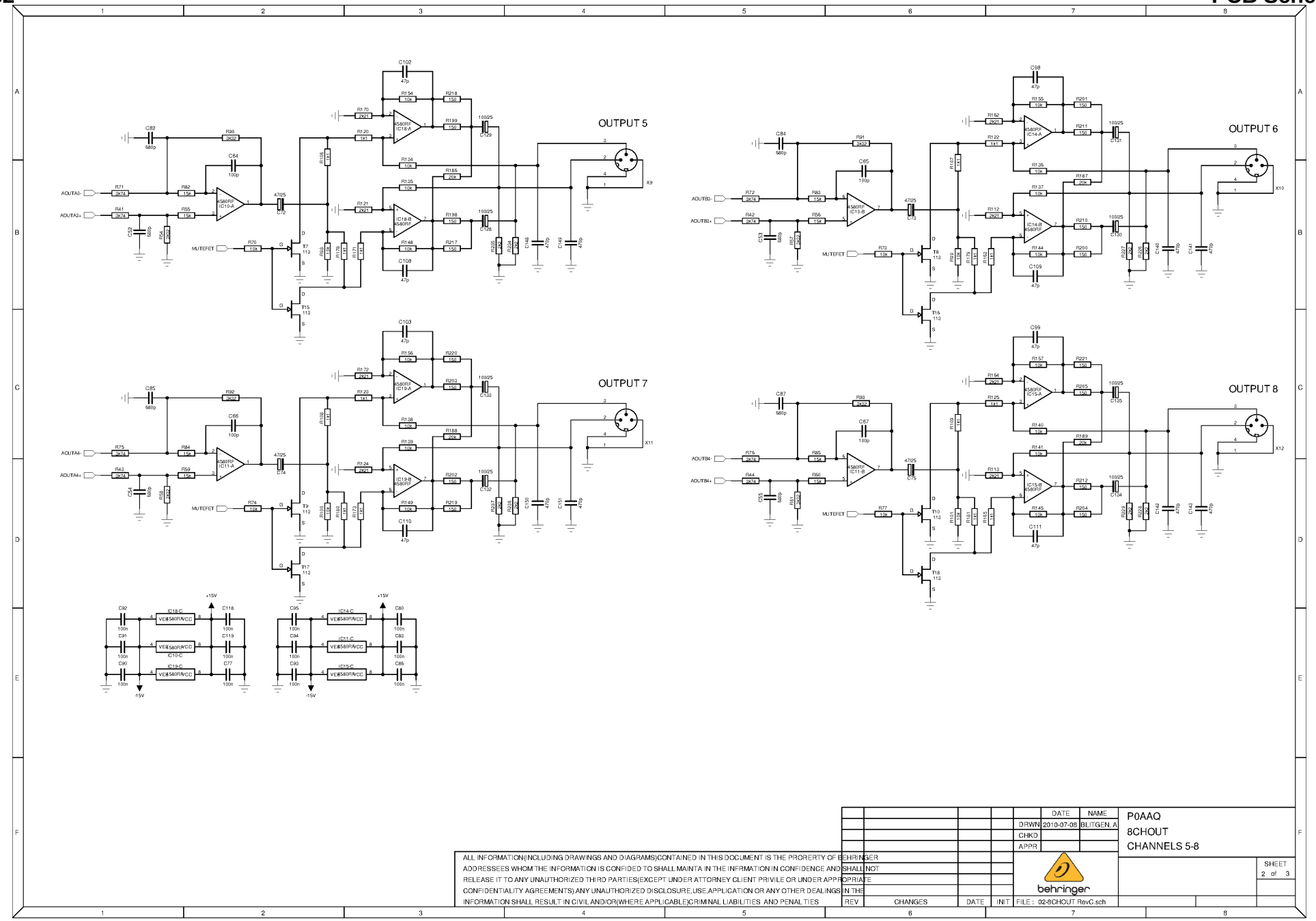

ALL INFORMATION(INCLUDING DRAWINGS AND DIAGRAMS)CONTAINED IN THIS DOCUMENT IS THE PRORERTY OF BEHRINGER ADDRESSEES WHOM THE INFORMATION IS CONFIDED TO SHALL MAINTA IN THE INFRMATION IN CONFIDENCE AND SHALL NOT RELEASE IT TO ANY UNAUTHORIZED THIRD PARTIES(EXCEPT UNDER ATTORNEY CLIENT PRIVILE OR UNDER APPROPRIATE CONFIDENTIALITY AGREEMENTS).ANY UNAUTHORIZED DISCLOSURE,USE,APPLICATION OR ANY OTHER DEALINGS IN THE INFORMATION SHALL RESULT IN CIVIL AND/OR(WHERE APPLICABLE)CRIMINAL LIABILITIES AND PENALTIES

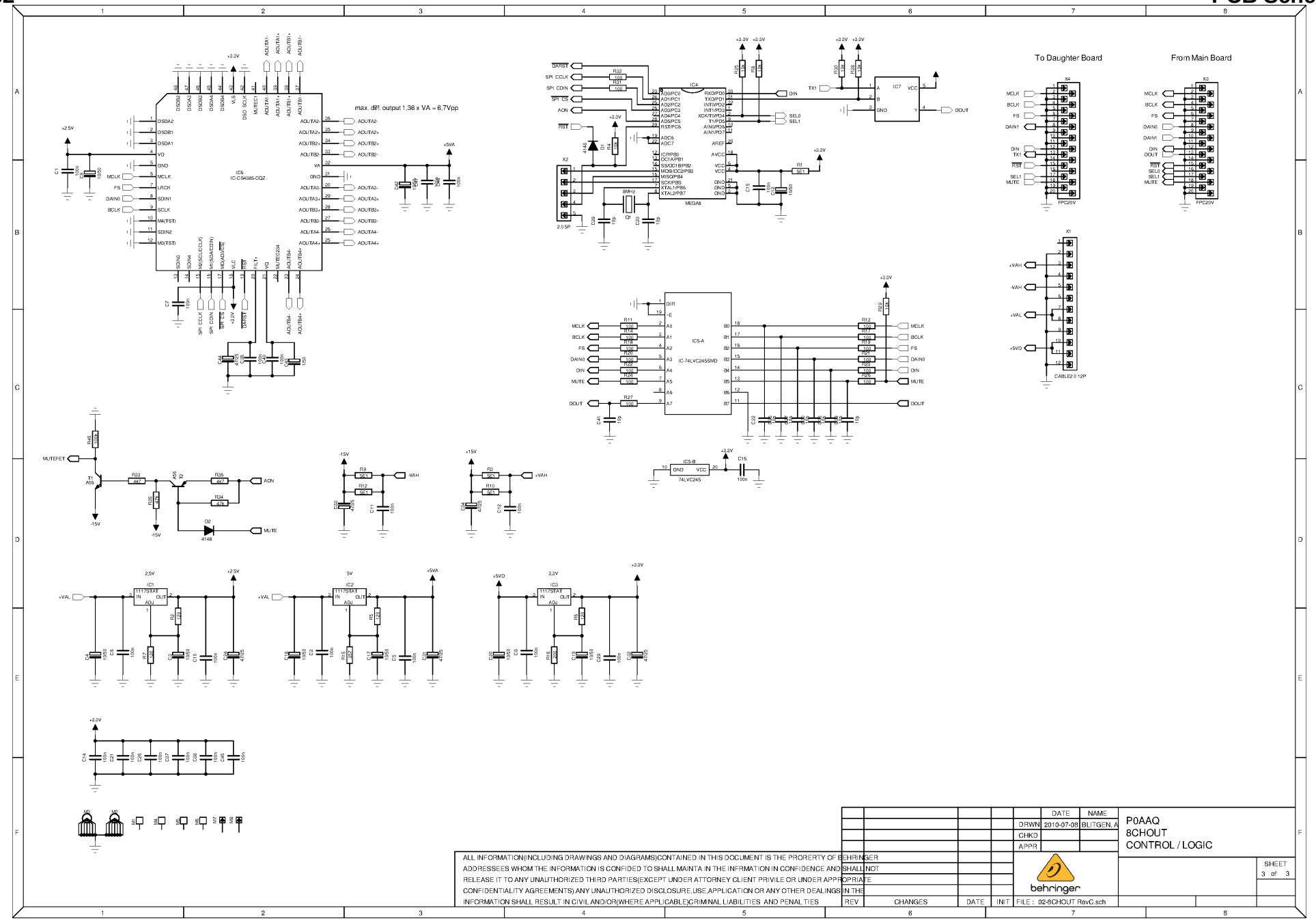
max. diff. output 1,36 x VA = 6,7Vpp
IC5
IC-CS4385-CQZ
IC4
MEGA8
IC7
IC5-A
IC-74LVC245SMD
IC5-B
74LVC245
To Daughter Board
From Main Board
X4
FPC20V
X3
FPC20V
X1
CABLE2.0 12P
X2
2.0 5P
IC1
1117STAT
IC2
1117STAT
IC3
1117STAT
2,5V
5V
3,3V
+2.5V
+5VA
+5VD
+3.3V
+VAL
-VAH
+VAH
+15V
-15V
MUTEFET
AON
MUTE
DOUT
DIN
MCLK
BCLK
FS
DAIN0
DAIN1
SEL0
SEL1
TX1
RST
DARST
SPI CCLK
SPI CDIN
SPI CS
8MHz
ALL INFORMATION(INCLUDING DRAWINGS AND DIAGRAMS)CONTAINED IN THIS DOCUMENT IS THE PRORERTY OF BEHRINGER
ADDRESSEES WHOM THE INFORMATION IS CONFIDED TO SHALL MAINTA IN THE INFRMATION IN CONFIDENCE AND SHALL NOT
RELEASE IT TO ANY UNAUTHORIZED THIRD PARTIES(EXCEPT UNDER ATTORNEY CLIENT PRIVILE OR UNDER APPROPRIATE
CONFIDENTIALITY AGREEMENTS).ANY UNAUTHORIZED DISCLOSURE,USE,APPLICATION OR ANY OTHER DEALINGS IN THE
INFORMATION SHALL RESULT IN CIVIL AND/OR(WHERE APPLICABLE)CRIMINAL LIABILITIES AND PENALTIES
DATE
NAME
DRWN 2010-07-08 BLITGEN, A
CHKD
APPR
P0AAQ
8CHOUT
CONTROL / LOGIC
SHEET 3 of 3
REV
CHANGES
DATE
INIT
FILE : 02-8CHOUT RevC.sch
behringer

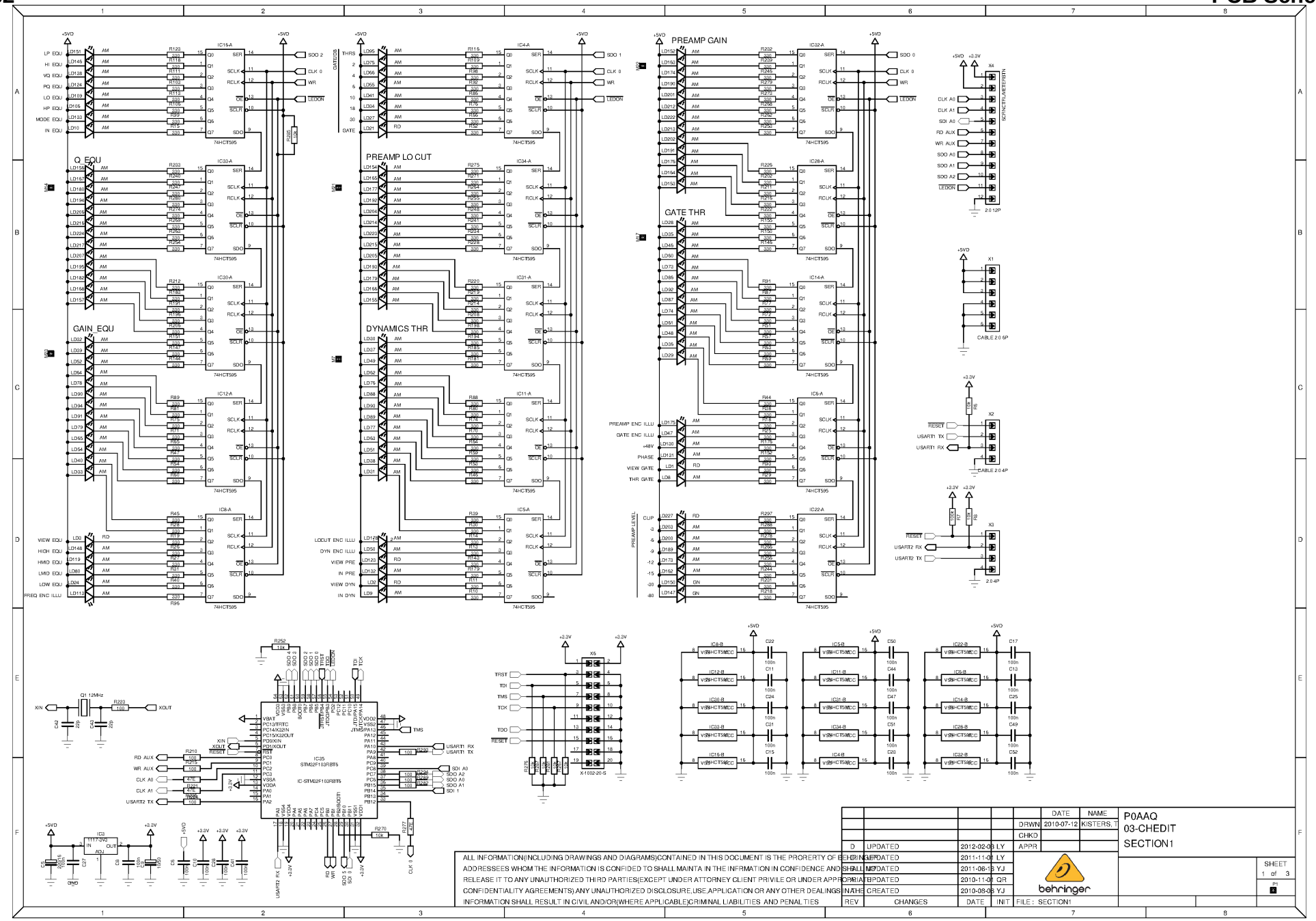
PREAMP GAIN
Q_EQU
PREAMP LO CUT
GATE THR
GAIN_EQU
DYNAMICS THR
74HCT595
IC35
STM32F103RBT6
IC-STM32F103RBT6
X-1002-20-S
CABLE 2.0 6P
CABLE 2.0 4P
2.0 12P
SCRNCTRLAETERSTN
P0AAQ
03-CHEDIT
SECTION1
DATE
NAME
DRWN 2010-07-12 KISTERS, T
CHKD
APPR
D UPDATED 2012-02-03 LY
C UPDATED 2011-11-07 LY
B UPDATED 2011-06-13 YJ
A UPDATED 2010-11-09 QR
CREATED 2010-08-06 YJ
REV CHANGES DATE INIT
FILE : SECTION1
SHEET 1 of 3
ALL INFORMATION(INCLUDING DRAWINGS AND DIAGRAMS)CONTAINED IN THIS DOCUMENT IS THE PRORERTY OF BEHRINGER
ADDRESSEES WHOM THE INFORMATION IS CONFIDED TO SHALL MAINTA IN THE INFRMATION IN CONFIDENCE AND SHALL NOT
RELEASE IT TO ANY UNAUTHORIZED THIRD PARTIES(EXCEPT UNDER ATTORNEY CLIENT PRIVILE OR UNDER APPROPRIATE
CONFIDENTIALITY AGREEMENTS).ANY UNAUTHORIZED DISCLOSURE,USE,APPLICATION OR ANY OTHER DEALINGS IN THE
INFORMATION SHALL RESULT IN CIVIL AND/OR(WHERE APPLICABLE)CRIMINAL LIABILITIES AND PENALTIES
behringer

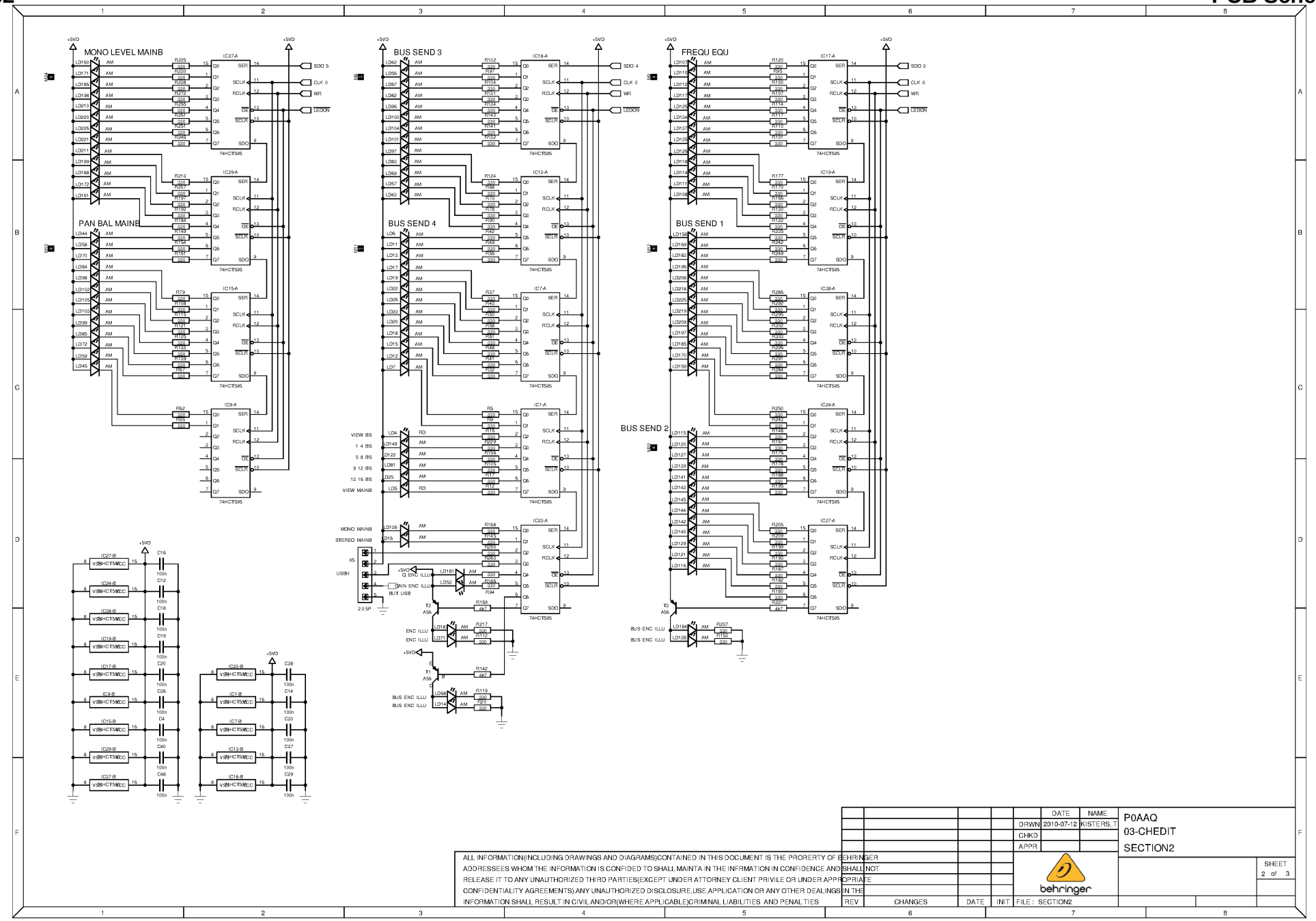
MONO LEVEL MAINB
PAN BAL MAINB
BUS SEND 3
BUS SEND 4
FREQU EQU
BUS SEND 1
BUS SEND 2
VIEW BS
1 4 BS
5 8 BS
9 12 BS
13 16 BS
VIEW MAINB
MONO MAINB
STEREO MAINB
SDO 5
SDO 4
SDO 3
CLK 0
WR
LEDON
74HCT595
+5VD
ALL INFORMATION(INCLUDING DRAWINGS AND DIAGRAMS)CONTAINED IN THIS DOCUMENT IS THE PRORERTY OF BEHRINGER
ADDRESSEES WHOM THE INFORMATION IS CONFIDED TO SHALL MAINTA IN THE INFRMATION IN CONFIDENCE AND SHALL NOT
RELEASE IT TO ANY UNAUTHORIZED THIRD PARTIES(EXCEPT UNDER ATTORNEY CLIENT PRIVILE OR UNDER APPROPRIATE
CONFIDENTIALITY AGREEMENTS).ANY UNAUTHORIZED DISCLOSURE,USE,APPLICATION OR ANY OTHER DEALINGS IN THE
INFORMATION SHALL RESULT IN CIVIL AND/OR(WHERE APPLICABLE)CRIMINAL LIABILITIES AND PENALTIES
DATE
NAME
DRWN 2010-07-12 KISTERS, T
CHKD
APPR
P0AAQ
03-CHEDIT
SECTION2
SHEET 2 of 3
behringer
REV
CHANGES
DATE
INIT
FILE : SECTION2

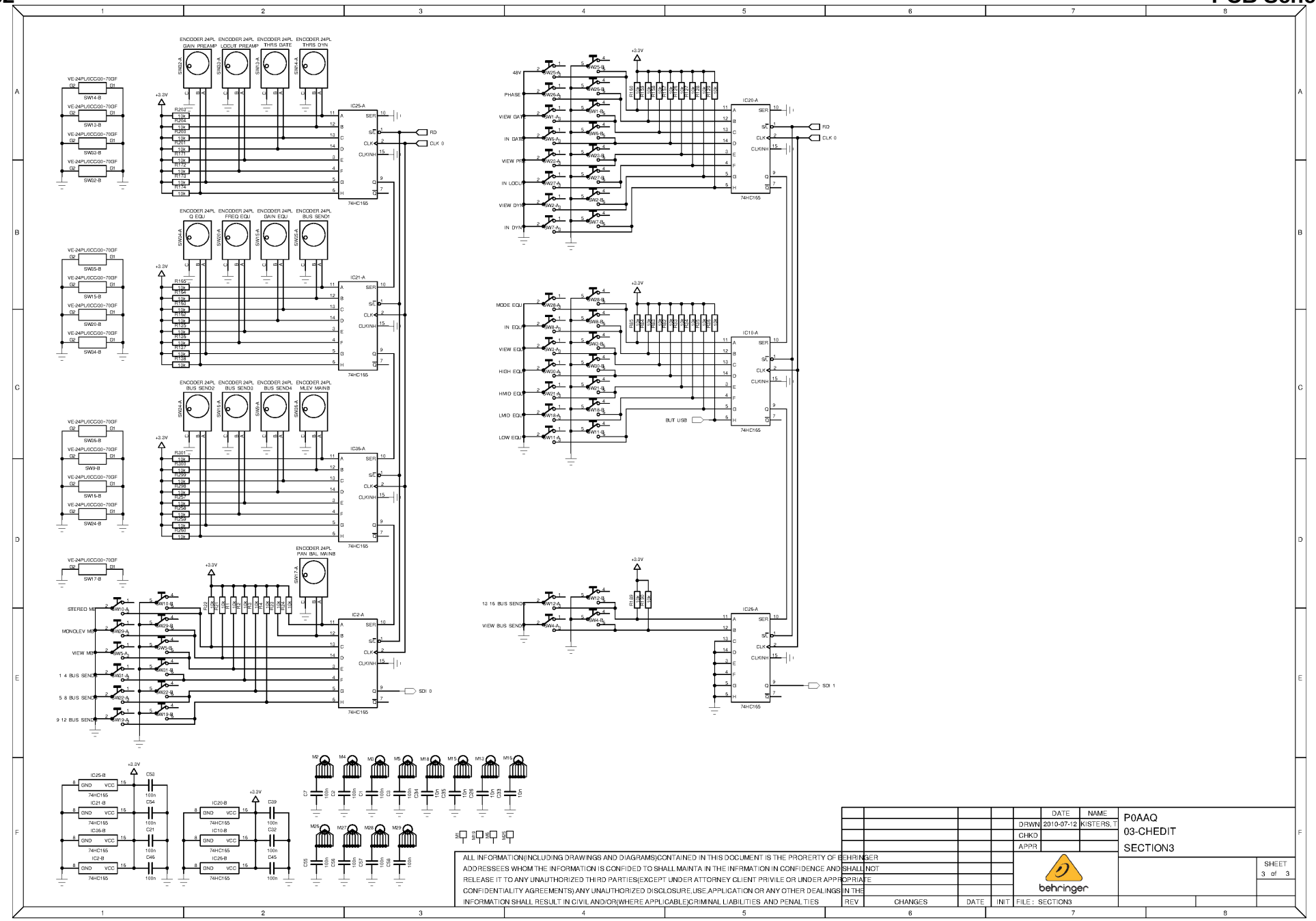

					DATE	NAME
				DRWN	2010-07-12	KISTERS, T
				CHKD		
				APPR		

P0AAQ
03-CHEDIT
SECTION3

SHEET 3 of 3

ALL INFORMATION(INCLUDING DRAWINGS AND DIAGRAMS)CONTAINED IN THIS DOCUMENT IS THE PRORERTY OF BEHRINGER ADDRESSEES WHOM THE INFORMATION IS CONFIDED TO SHALL MAINTA IN THE INFRMATION IN CONFIDENCE AND SHALL NOT RELEASE IT TO ANY UNAUTHORIZED THIRD PARTIES(EXCEPT UNDER ATTORNEY CLIENT PRIVILE OR UNDER APPROPRIATE CONFIDENTIALITY AGREEMENTS).ANY UNAUTHORIZED DISCLOSURE,USE,APPLICATION OR ANY OTHER DEALINGS IN THE INFORMATION SHALL RESULT IN CIVIL AND/OR(WHERE APPLICABLE)CRIMINAL LIABILITIES AND PENALTIES

REV	CHANGES	DATE	INIT	FILE : SECTION3

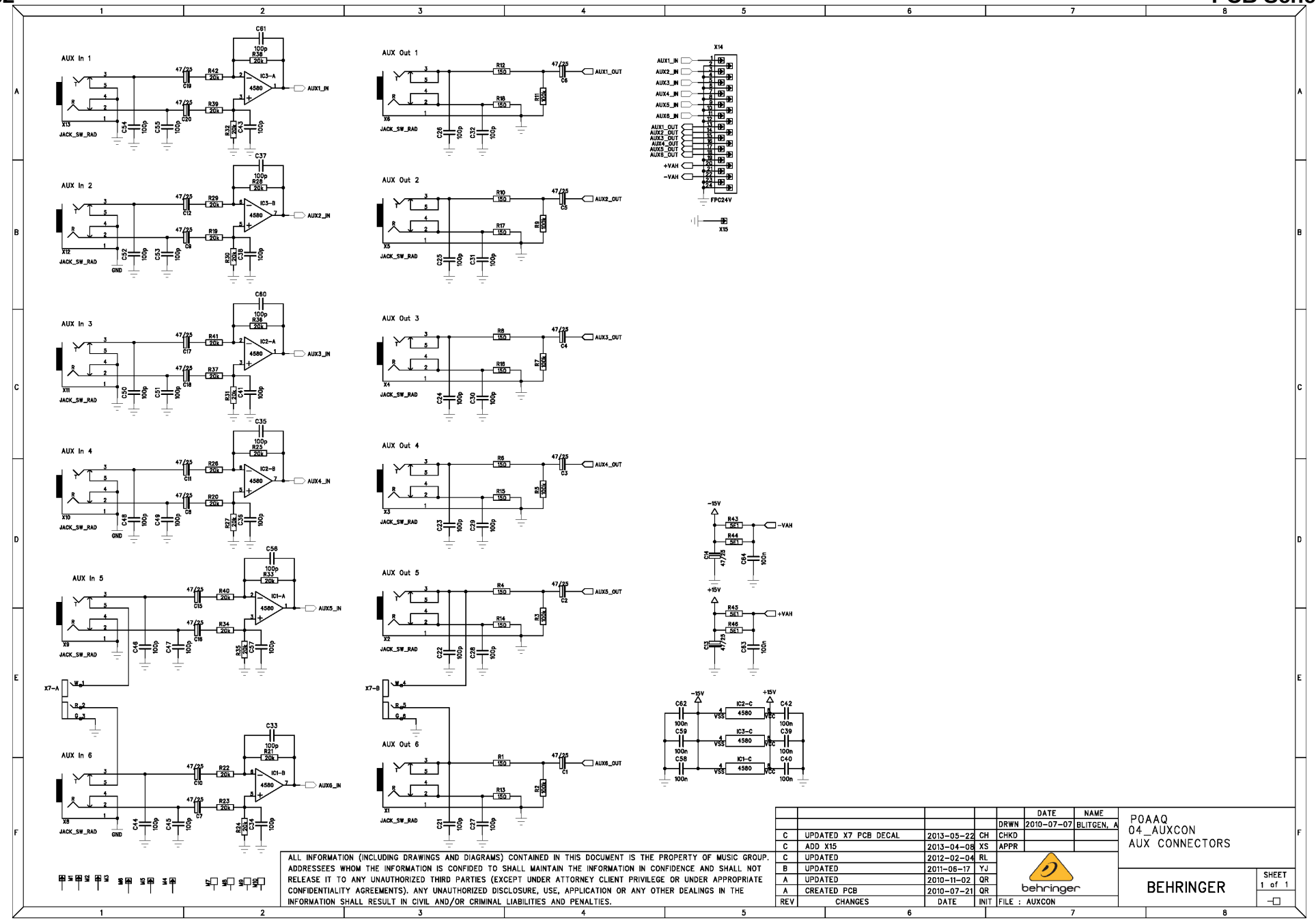
AUX In 1
AUX In 2
AUX In 3
AUX In 4
AUX In 5
AUX In 6
AUX Out 1
AUX Out 2
AUX Out 3
AUX Out 4
AUX Out 5
AUX Out 6
AUX1_IN
AUX2_IN
AUX3_IN
AUX4_IN
AUX5_IN
AUX6_IN
AUX1_OUT
AUX2_OUT
AUX3_OUT
AUX4_OUT
AUX5_OUT
AUX6_IN
AUX6_OUT
X14
FPC24V
X15
-15V
+15V
-VAH
+VAH
JACK_SW_RAD
4580
POAAQ
04_AUXCON
AUX CONNECTORS
BEHRINGER
SHEET 1 of 1
FILE : AUXCON
DRWN 2010-07-07 BLITGEN, A
CHKD
APPR
C UPDATED X7 PCB DECAL 2013-05-22 CH
C ADD X15 2013-04-08 XS
C UPDATED 2012-02-04 RL
B UPDATED 2011-06-17 YJ
A UPDATED 2010-11-02 QR
A CREATED PCB 2010-07-21 QR
REV CHANGES DATE INIT
ALL INFORMATION (INCLUDING DRAWINGS AND DIAGRAMS) CONTAINED IN THIS DOCUMENT IS THE PROPERTY OF MUSIC GROUP. ADDRESSEES WHOM THE INFORMATION IS CONFIDED TO SHALL MAINTAIN THE INFORMATION IN CONFIDENCE AND SHALL NOT RELEASE IT TO ANY UNAUTHORIZED THIRD PARTIES (EXCEPT UNDER ATTORNEY CLIENT PRIVILEGE OR UNDER APPROPRIATE CONFIDENTIALITY AGREEMENTS). ANY UNAUTHORIZED DISCLOSURE, USE, APPLICATION OR ANY OTHER DEALINGS IN THE INFORMATION SHALL RESULT IN CIVIL AND/OR CRIMINAL LIABILITIES AND PENALTIES.

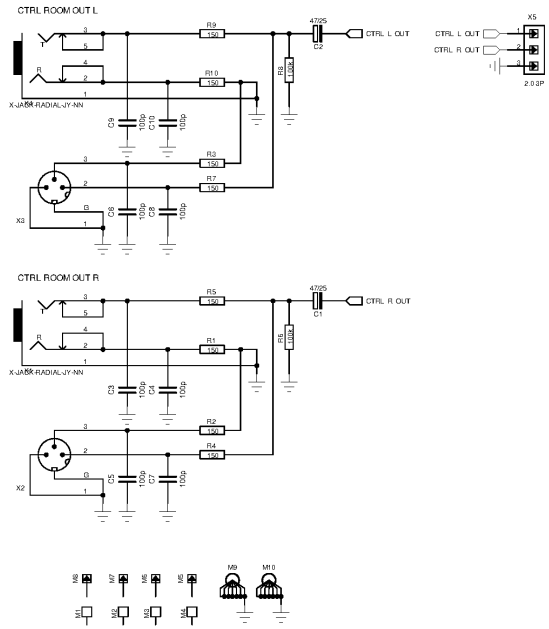

					DATE	NAME
				DRWN	2010-07-07	BLITGEN, A
				CHKD		
				APPR		
	UPDATED	2012-02-05	RL			
	UPDATED	2011-06-13	LY			
	UPDATED	2010-11-02	QR			
	CREATED	2010-07-23	QR			
REV	CHANGES	DATE	INIT	FILE : 05-CRCON RevC.sch		

P0AAQ
05-CRCON
CONTROL ROOM CONNECTORS

SHEET 1 of 1

P1

ALL INFORMATION(INCLUDING DRAWINGS AND DIAGRAMS)CONTAINED IN THIS DOCUMENT IS THE PRORERTY OF BEHRINGER. ADDRESSEES WHOM THE INFORMATION IS CONFIDED TO SHALL MAINTA IN THE INFRMATION IN CONFIDENCE AND SHALL NOT RELEASE IT TO ANY UNAUTHORIZED THIRD PARTIES(EXCEPT UNDER ATTORNEY CLIENT PRIVILE OR UNDER APPROPRIATE CONFIDENTIALITY AGREEMENTS).ANY UNAUTHORIZED DISCLOSURE,USE,APPLICATION OR ANY OTHER DEALINGS IN THE INFORMATION SHALL RESULT IN CIVIL AND/OR(WHERE APPLICABLE)CRIMINAL LIABILITIES AND PENALTIES

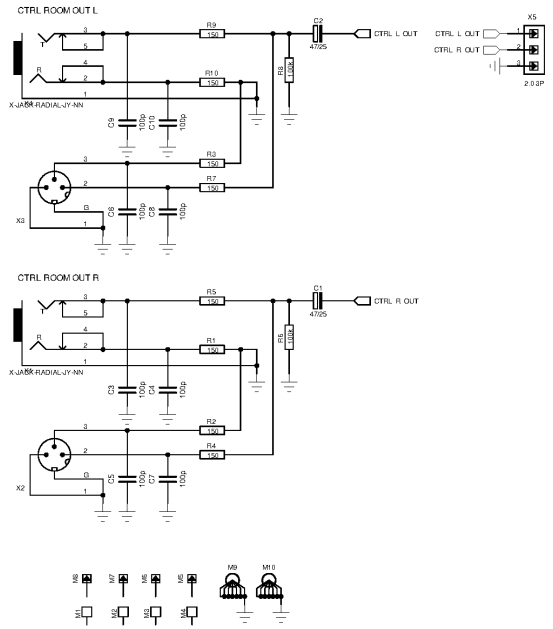

					DATE	NAME
				DRWN	2010-07-07	BLITGEN, A
				CHKD		
				APPR		
3	UPDATED	2012-02-05	RL			
2	UPDATED	2011-06-13	LY			
1	UPDATED	2010-11-02	QR			
0	CREATED	2010-07-23	QR			
REV	CHANGES	DATE	INIT	FILE : P0AAQ_05-CRCON_RevC.sch		

P0AAQ
05-CRCON
CONTROL ROOM CONNECTORS

SHEET 1 of 1

P1

ALL INFORMATION(INCLUDING DRAWINGS AND DIAGRAMS)CONTAINED IN THIS DOCUMENT IS THE PRORERTY OF BEHRINGER
ADDRESSEES WHOM THE INFORMATION IS CONFIDED TO SHALL MAINTA IN THE INFRMATION IN CONFIDENCE AND SHALL NOT
RELEASE IT TO ANY UNAUTHORIZED THIRD PARTIES(EXCEPT UNDER ATTORNEY CLIENT PRIVILE OR UNDER APPROPRIATE
CONFIDENTIALITY AGREEMENTS) ANY UNAUTHORIZED DISCLOSURE,USE,APPLICATION OR ANY OTHER DEALINGS IN THE
INFORMATION SHALL RESULT IN CIVIL AND/OR(WHERE APPLICABLE)CRIMINAL LIABILITIES AND PENALTIES

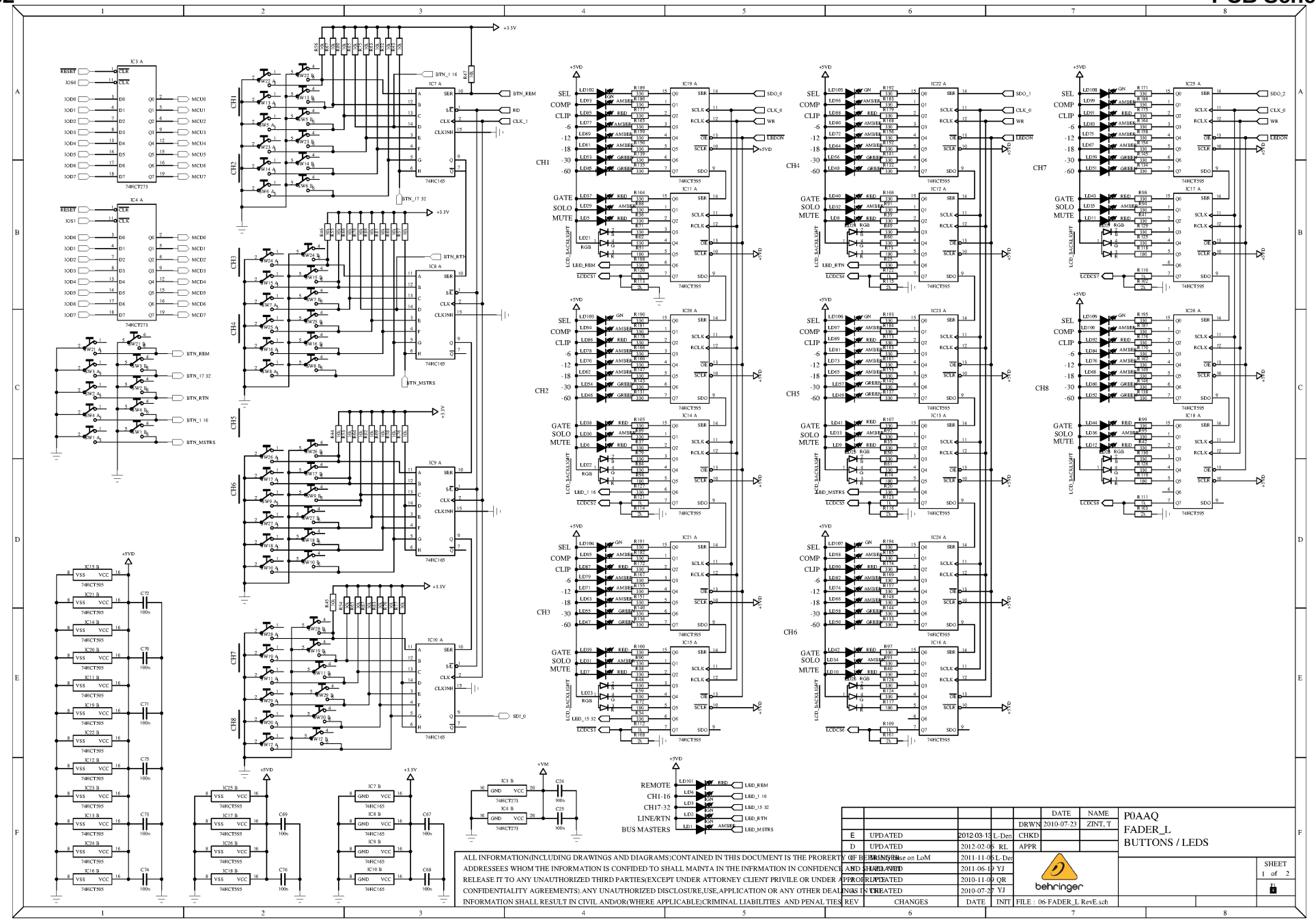
P0AAQ
FADER_L
BUTTONS / LEDS
DRWN 2010-07-23 ZINT, T
CHKD L-Den
APPR
E UPDATED 2012-03-15
D UPDATED 2012-02-06 RL
2011-11-05 L-Den
2011-06-10 YJ
2010-11-09 QR
2010-07-27 YJ
DATE NAME
REV CHANGES DATE INIT
FILE : 06-FADER_L RevE.sch
SHEET 1 of 2
ALL INFORMATION(INCLUDING DRAWINGS AND DIAGRAMS)CONTAINED IN THIS DOCUMENT IS THE PRORERTY OF BEHRINGER
ADDRESSEES WHOM THE INFORMATION IS CONFIDED TO SHALL MAINTA IN THE INFRMATION IN CONFIDENCE AND SHALL NOT
RELEASE IT TO ANY UNAUTHORIZED THIRD PARTIES(EXCEPT UNDER ATTORNEY CLIENT PRIVILE OR UNDER APPROPRIATE
CONFIDENTIALITY AGREEMENTS),ANY UNAUTHORIZED DISCLOSURE,USE,APPLICATION OR ANY OTHER DEALINGS IN THE
INFORMATION SHALL RESULT IN CIVIL AND/OR(WHERE APPLICABLE)CRIMINAL LIABILITIES AND PENAL TIES
behringer

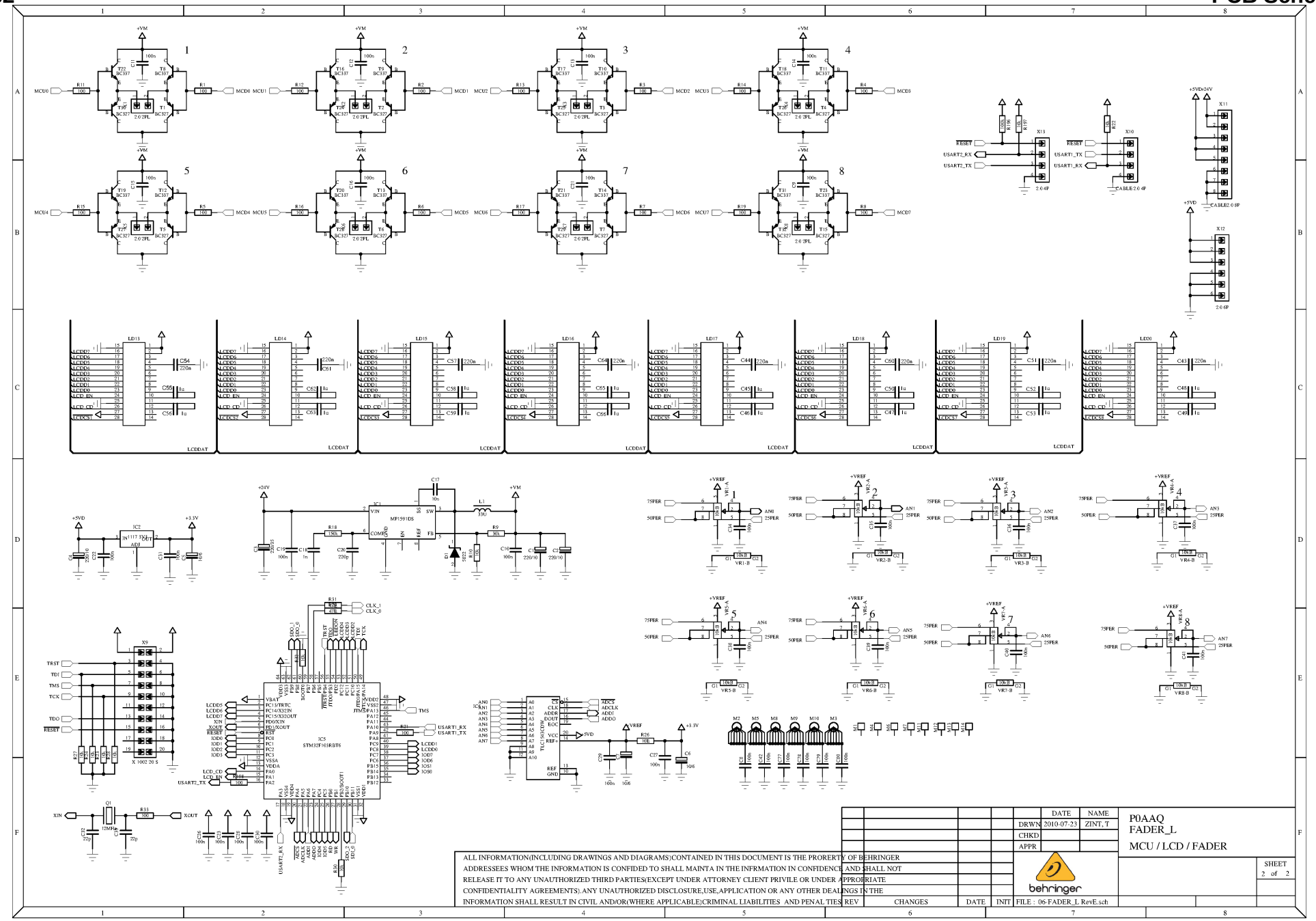
P0AAQ
FADER_L
MCU / LCD / FADER
DRWN 2010-07-23 ZINT, T
CHKD
APPR
SHEET 2 of 2
ALL INFORMATION(INCLUDING DRAWINGS AND DIAGRAMS)CONTAINED IN THIS DOCUMENT IS THE PRORERTY OF BEHRINGER ADDRESSEES WHOM THE INFORMATION IS CONFIDED TO SHALL MAINTA IN THE INFRMATION IN CONFIDENCE AND SHALL NOT RELEASE IT TO ANY UNAUTHORIZED THIRD PARTIES(EXCEPT UNDER ATTORNEY CLIENT PRIVILE OR UNDER APPROPRIATE CONFIDENTIALITY AGREEMENTS).ANY UNAUTHORIZED DISCLOSURE,USE,APPLICATION OR ANY OTHER DEALINGS IN THE INFORMATION SHALL RESULT IN CIVIL AND/OR(WHERE APPLICABLE)CRIMINAL LIABILITIES AND PENAL TIES
REV CHANGES DATE INIT
FILE : 06-FADER_L RevE.sch
behringer

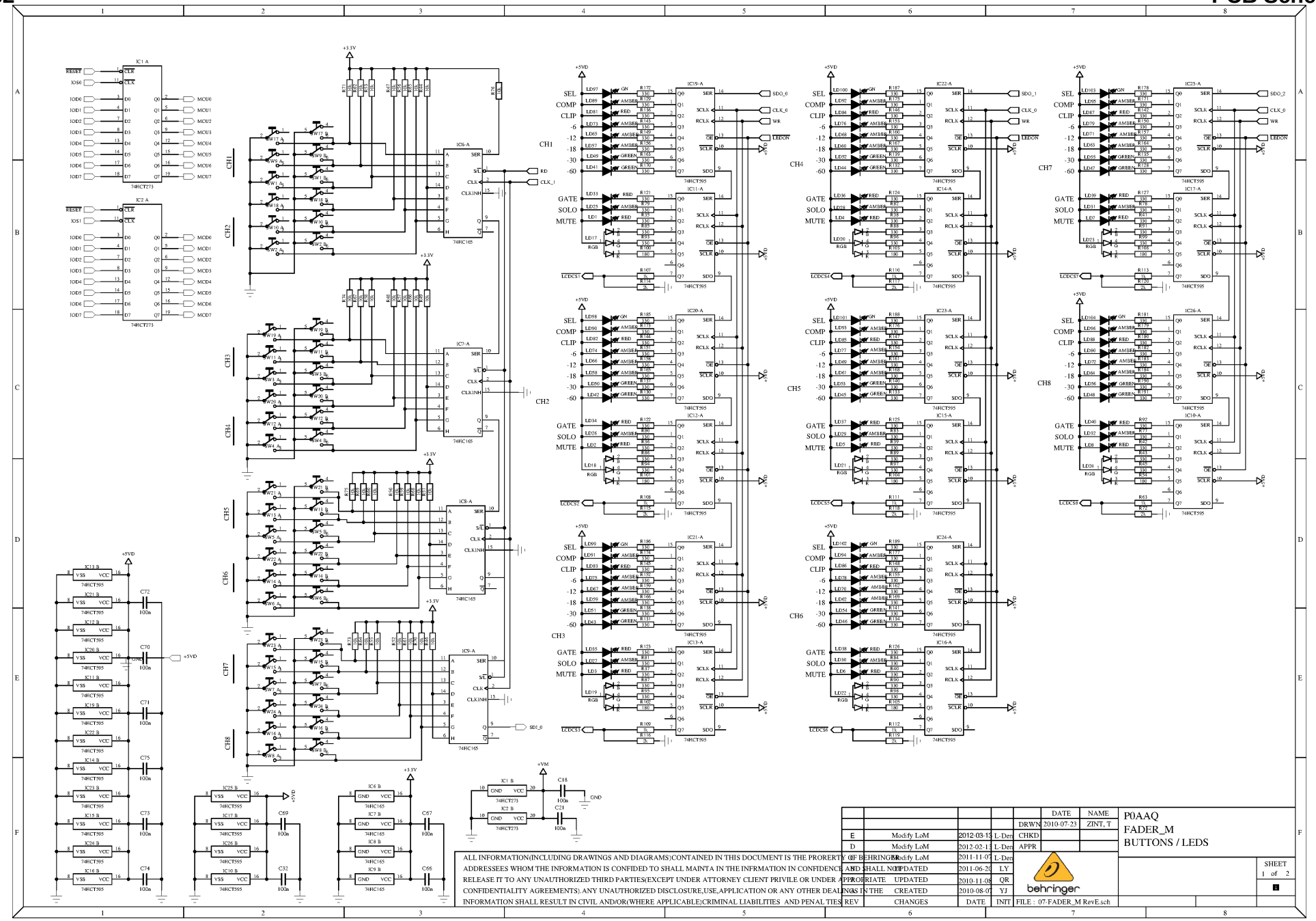
P0AAQ
FADER_M
BUTTONS / LEDS
DRWN 2010-07-23 ZINT, T
CHKD
APPR
SHEET 1 of 2
FILE : 07-FADER_M RevE.sch
ALL INFORMATION(INCLUDING DRAWINGS AND DIAGRAMS)CONTAINED IN THIS DOCUMENT IS THE PRORERTY OF BEHRINGER AND SHALL NOT BE DISCLOSED TO THIRD PARTIES. ADDRESSEES WHOM THE INFORMATION IS CONFIDED TO SHALL MAINTA IN THE INFRMATION IN CONFIDENCE AND SHALL NOT USE IT FOR ANY OTHER PURPOSE OR RELEASE IT TO ANY UNAUTHORIZED THIRD PARTIES(EXCEPT UNDER ATTORNEY CLIENT PRIVILE OR UNDER APPROPRIATE CONFIDENTIALITY AGREEMENTS).ANY UNAUTHORIZED DISCLOSURE,USE,APPLICATION OR ANY OTHER DEALINGS IN THE INFORMATION SHALL RESULT IN CIVIL AND/OR(WHERE APPLICABLE)CRIMINAL LIABILITIES AND PENAL TIES.
REV CHANGES DATE INIT
E Modify LoM 2012-03-15 L-Den
D Modify LoM 2012-02-13 L-Den
Modify LoM 2011-11-07 L-Den
UPDATED 2011-06-20 LY
UPDATED 2010-11-08 QR
CREATED 2010-08-07 YJ
behringer

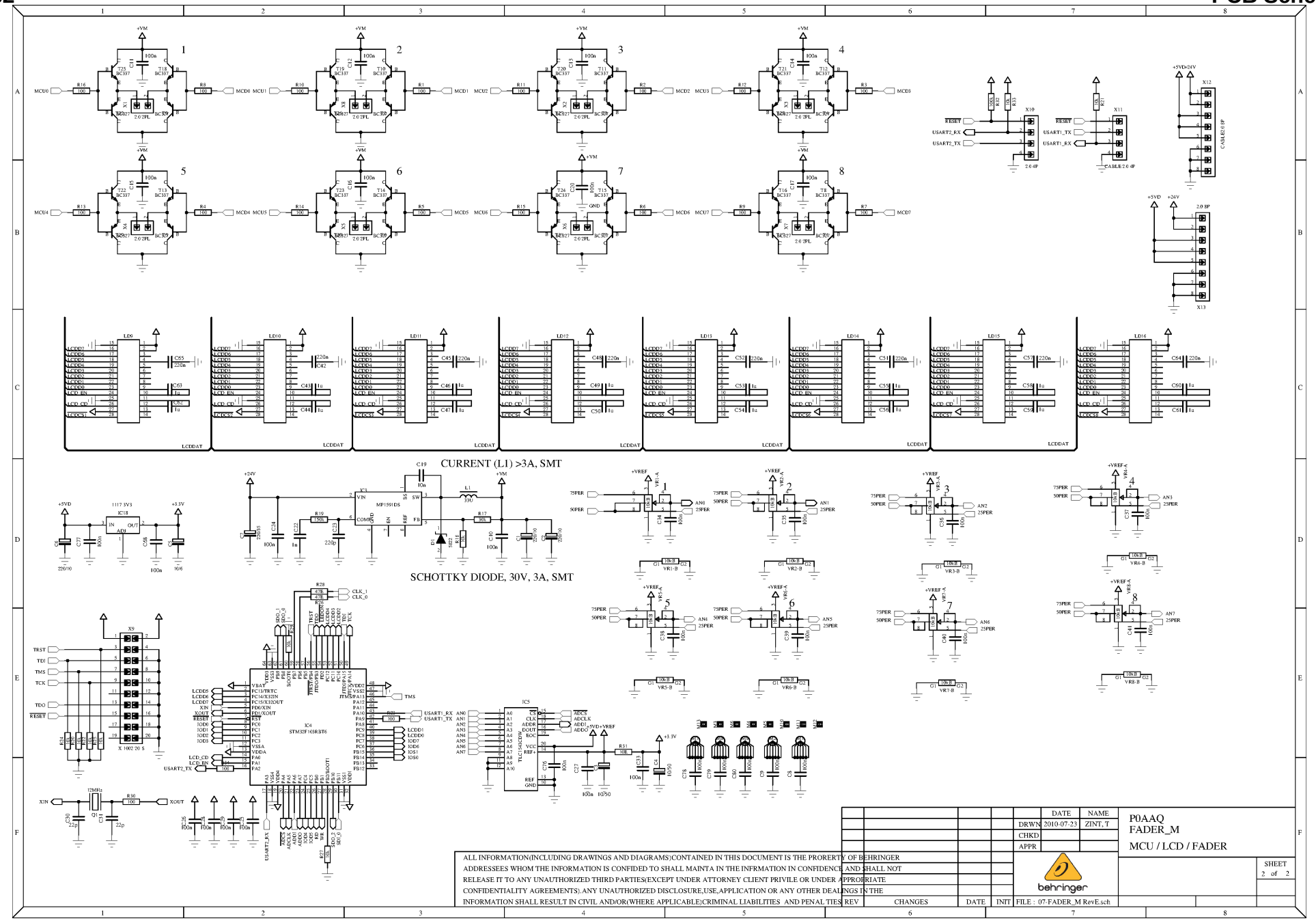
CURRENT (L1) >3A, SMT
SCHOTTKY DIODE, 30V, 3A, SMT
ALL INFORMATION(INCLUDING DRAWINGS AND DIAGRAMS)CONTAINED IN THIS DOCUMENT IS THE PRORERTY OF BEHRINGER
ADDRESSEES WHOM THE INFORMATION IS CONFIDED TO SHALL MAINTA IN THE INFRMATION IN CONFIDENCE AND SHALL NOT
RELEASE IT TO ANY UNAUTHORIZED THIRD PARTIES(EXCEPT UNDER ATTORNEY CLIENT PRIVILE OR UNDER APPROPRIATE
CONFIDENTIALITY AGREEMENTS).ANY UNAUTHORIZED DISCLOSURE,USE,APPLICATION OR ANY OTHER DEALINGS IN THE
INFORMATION SHALL RESULT IN CIVIL AND/OR(WHERE APPLICABLE)CRIMINAL LIABILITIES AND PENAL TIES
REV
CHANGES
DATE
INIT
DATE
NAME
DRWN 2010-07-23 ZINT, T
CHKD
APPR
behringer
FILE : 07-FADER_M RevE.sch
P0AAQ
FADER_M
MCU / LCD / FADER
SHEET
2 of 2

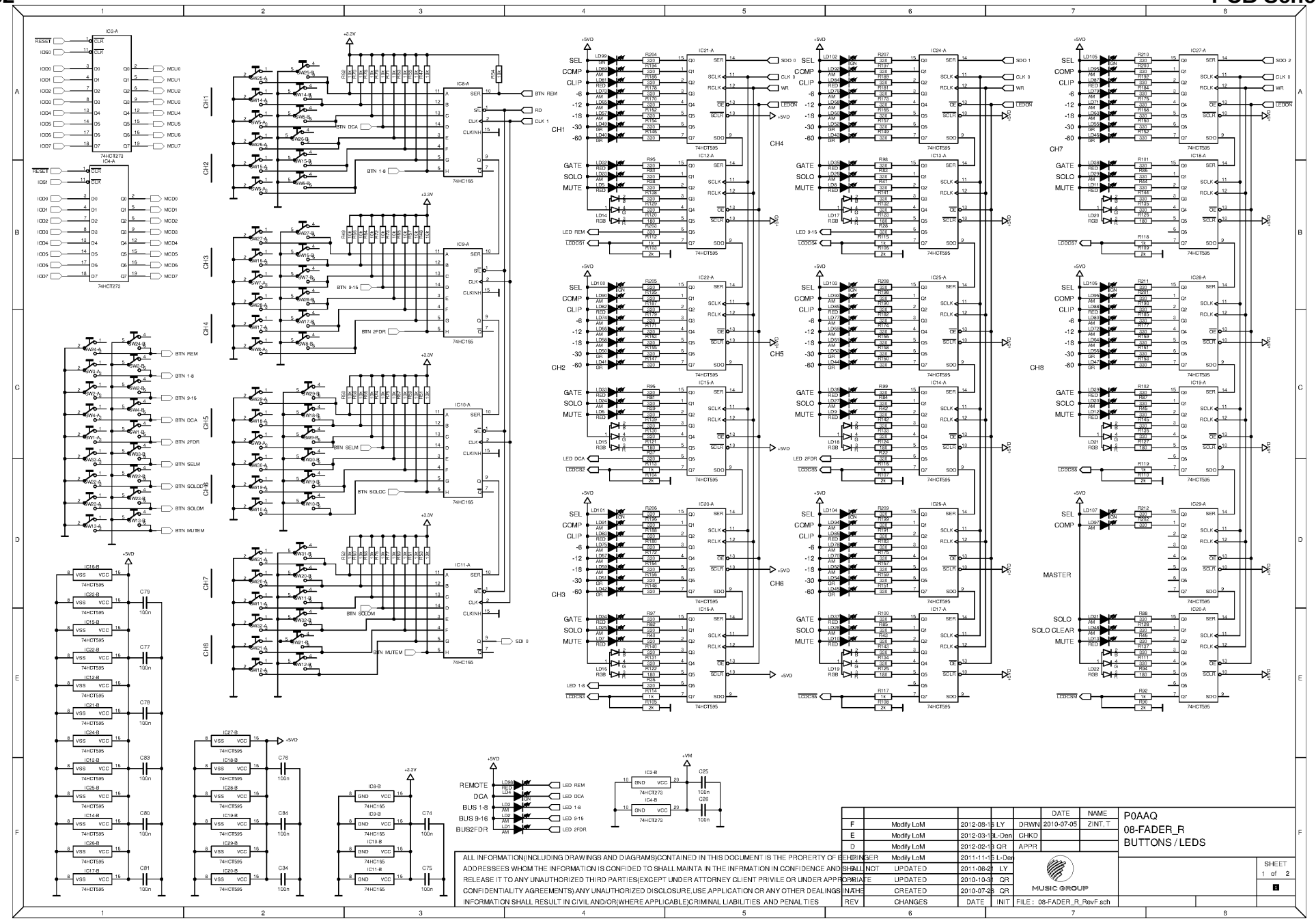
P0AAQ
08-FADER_R
BUTTONS / LEDS
SHEET 1 of 2
FILE : 08-FADER_R_RevF.sch
MUSIC GROUP
ALL INFORMATION(INCLUDING DRAWINGS AND DIAGRAMS)CONTAINED IN THIS DOCUMENT IS THE PRORERTY OF BEHRINGER
ADDRESSEES WHOM THE INFORMATION IS CONFIDED TO SHALL MAINTA IN THE INFRMATION IN CONFIDENCE AND SHALL NOT
RELEASE IT TO ANY UNAUTHORIZED THIRD PARTIES(EXCEPT UNDER ATTORNEY CLIENT PRIVILE OR UNDER APPROPRIATE
CONFIDENTIALITY AGREEMENTS).ANY UNAUTHORIZED DISCLOSURE,USE,APPLICATION OR ANY OTHER DEALINGS WITH THE
INFORMATION SHALL RESULT IN CIVIL AND/OR(WHERE APPLICABLE)CRIMINAL LIABILITIES AND PENALTIES

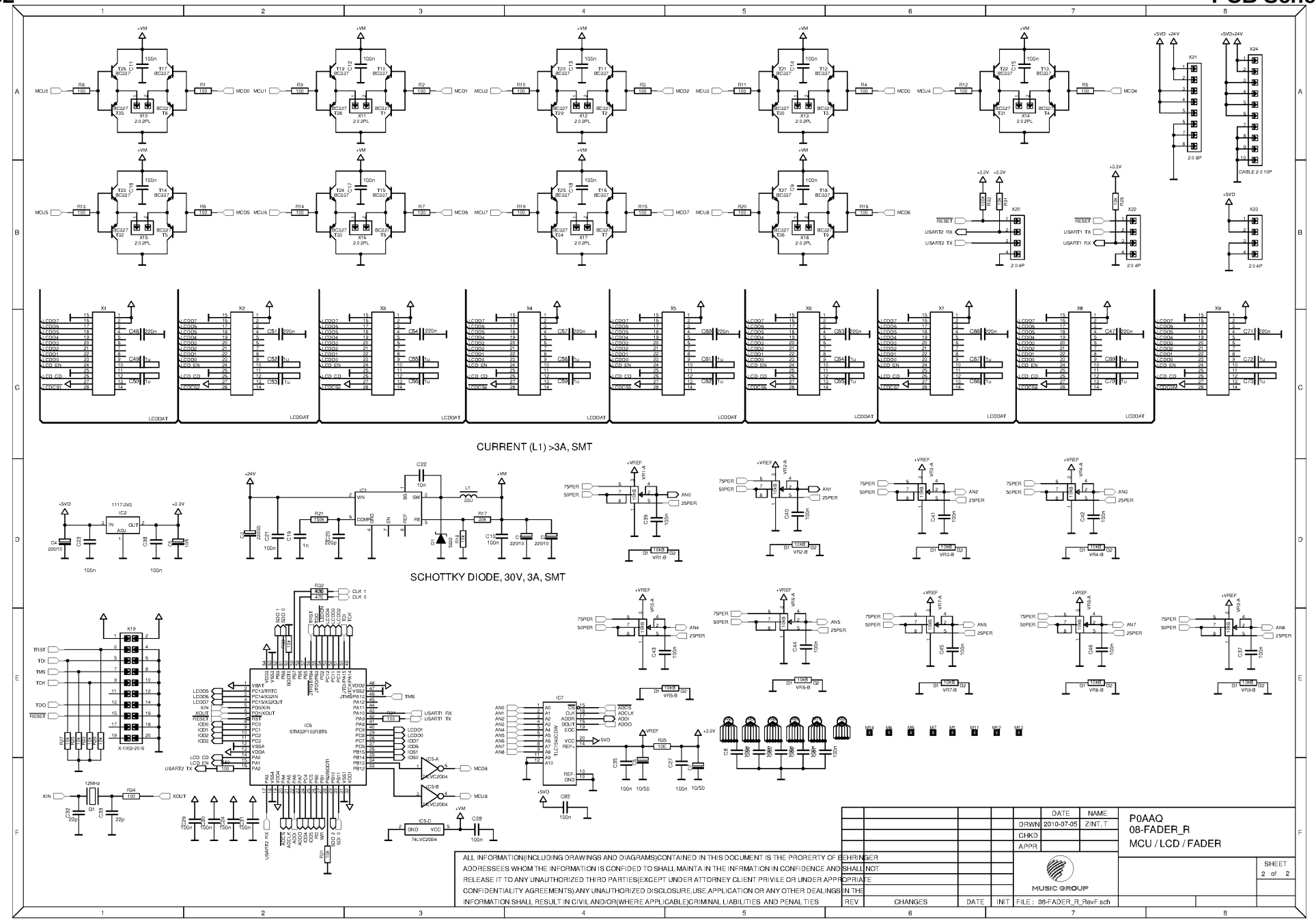
CURRENT (L1) >3A, SMT
SCHOTTKY DIODE, 30V, 3A, SMT
P0AAQ
08-FADER_R
MCU / LCD / FADER
DATE
NAME
DRWN 2010-07-05 ZINT, T
CHKD
APPR
SHEET 2 of 2
ALL INFORMATION(INCLUDING DRAWINGS AND DIAGRAMS)CONTAINED IN THIS DOCUMENT IS THE PRORERTY OF BEHRINGER
ADDRESSEES WHOM THE INFORMATION IS CONFIDED TO SHALL MAINTA IN THE INFRMATION IN CONFIDENCE AND SHALL NOT
RELEASE IT TO ANY UNAUTHORIZED THIRD PARTIES(EXCEPT UNDER ATTORNEY CLIENT PRIVILE OR UNDER APPROPRIATE
CONFIDENTIALITY AGREEMENTS).ANY UNAUTHORIZED DISCLOSURE,USE,APPLICATION OR ANY OTHER DEALINGS IN THE
INFORMATION SHALL RESULT IN CIVIL AND/OR(WHERE APPLICABLE)CRIMINAL LIABILITIES AND PENALTIES
REV CHANGES DATE INIT
FILE : 08-FADER_R_RevF.sch
MUSIC GROUP

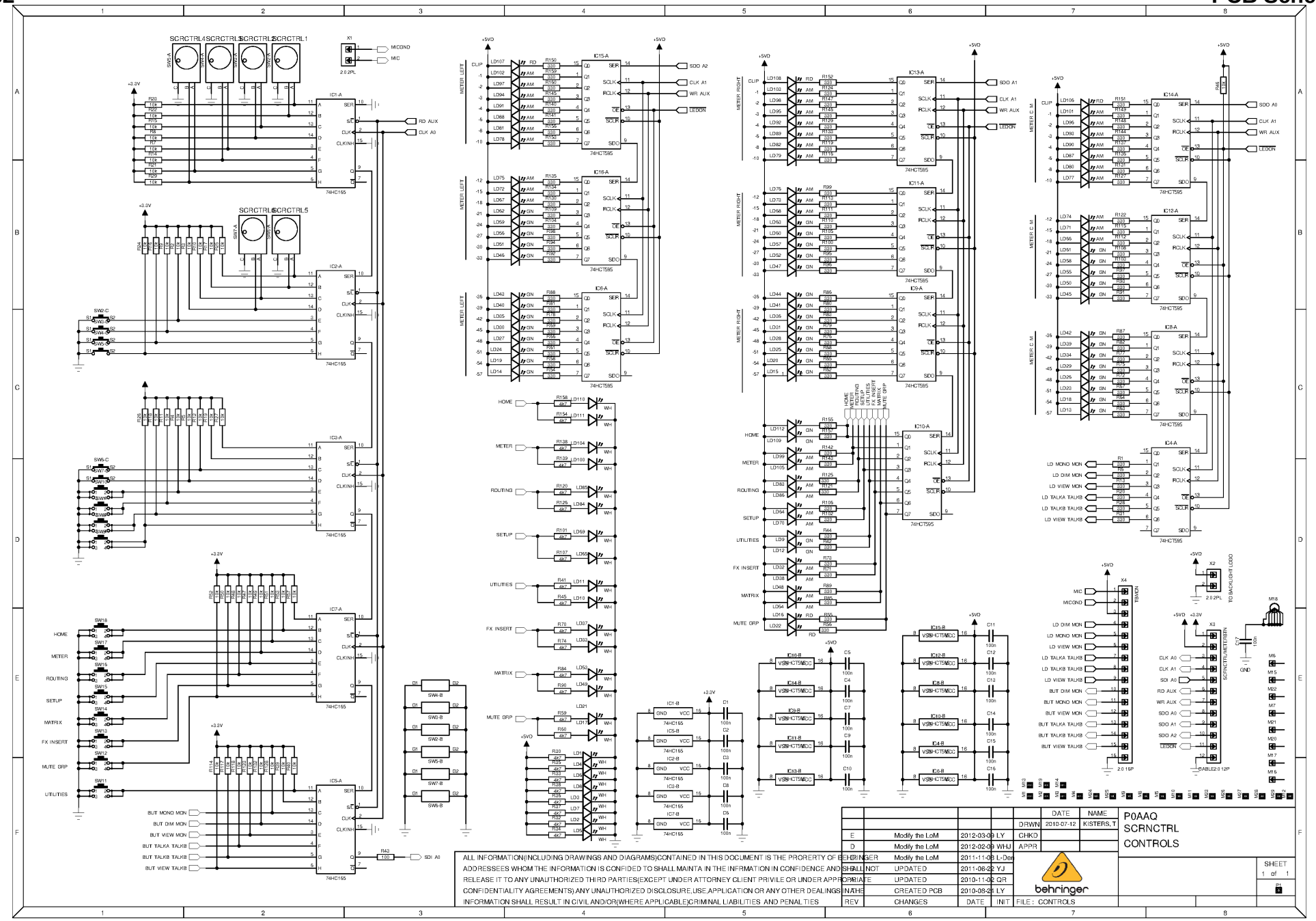

				DATE	NAME
			DRWN	2010-07-12	KISTERS, T
E	Modify the LoM	2012-03-09	LY	CHKD	
D	Modify the LoM	2012-02-09	WHJ	APPR	
C	Modify the LoM	2011-11-09	L-Den		
B	UPDATED	2011-06-22	YJ		
A	UPDATED	2010-11-02	QR		
	CREATED PCB	2010-08-24	LY		
REV	CHANGES	DATE	INIT	FILE : CONTROLS	

P0AAQ
SCRNCTRL
CONTROLS

SHEET 1 of 1

ALL INFORMATION(INCLUDING DRAWINGS AND DIAGRAMS)CONTAINED IN THIS DOCUMENT IS THE PRORERTY OF BEHRINGER AND SHALL NOT BE DISCLOSED TO ANY THIRD PARTIES(EXCEPT UNDER ATTORNEY CLIENT PRIVILE OR UNDER APPROPRIATE CONFIDENTIALITY AGREEMENTS).ANY UNAUTHORIZED DISCLOSURE,USE,APPLICATION OR ANY OTHER DEALINGS IN THE INFORMATION SHALL RESULT IN CIVIL AND/OR(WHERE APPLICABLE)CRIMINAL LIABILITIES AND PENALTIES.

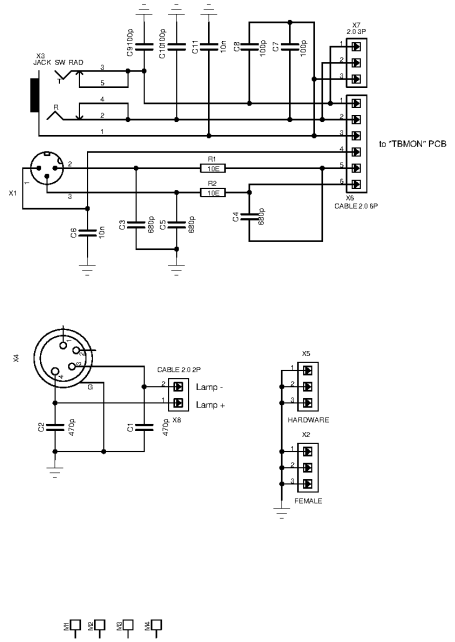

					DATE	NAME
				DRWN	2010-07-07	BLITGEN, A
				CHKD		
				APPR		

P0AAQ
10-TBMJACK
TB MIC / PHONES / LAMP

ALL INFORMATION(INCLUDING DRAWINGS AND DIAGRAMS)CONTAINED IN THIS DOCUMENT IS THE PRORERTY OF BEHRINGER. ADDRESSEES WHOM THE INFORMATION IS CONFIDED TO SHALL MAINTA IN THE INFRMATION IN CONFIDENCE AND SHALL NOT RELEASE IT TO ANY UNAUTHORIZED THIRD PARTIES(EXCEPT UNDER ATTORNEY CLIENT PRIVILE OR UNDER APPROPRIATE CONFIDENTIALITY AGREEMENTS).ANY UNAUTHORIZED DISCLOSURE,USE,APPLICATION OR ANY OTHER DEALINGS IN THE INFORMATION SHALL RESULT IN CIVIL AND/OR(WHERE APPLICABLE)CRIMINAL LIABILITIES AND PENALTIES

REV	CHANGES	DATE	INIT
D	UPDATED	2012-02-10	HJW
C	UPDATED	2011-06-23	LY
B	UPDATED	2010-11-02	QR
A	CREATED	2010-07-30	QR

behringer

FILE : 10-TBMJACK RevC.sch

SHEET 1 of 1

P1

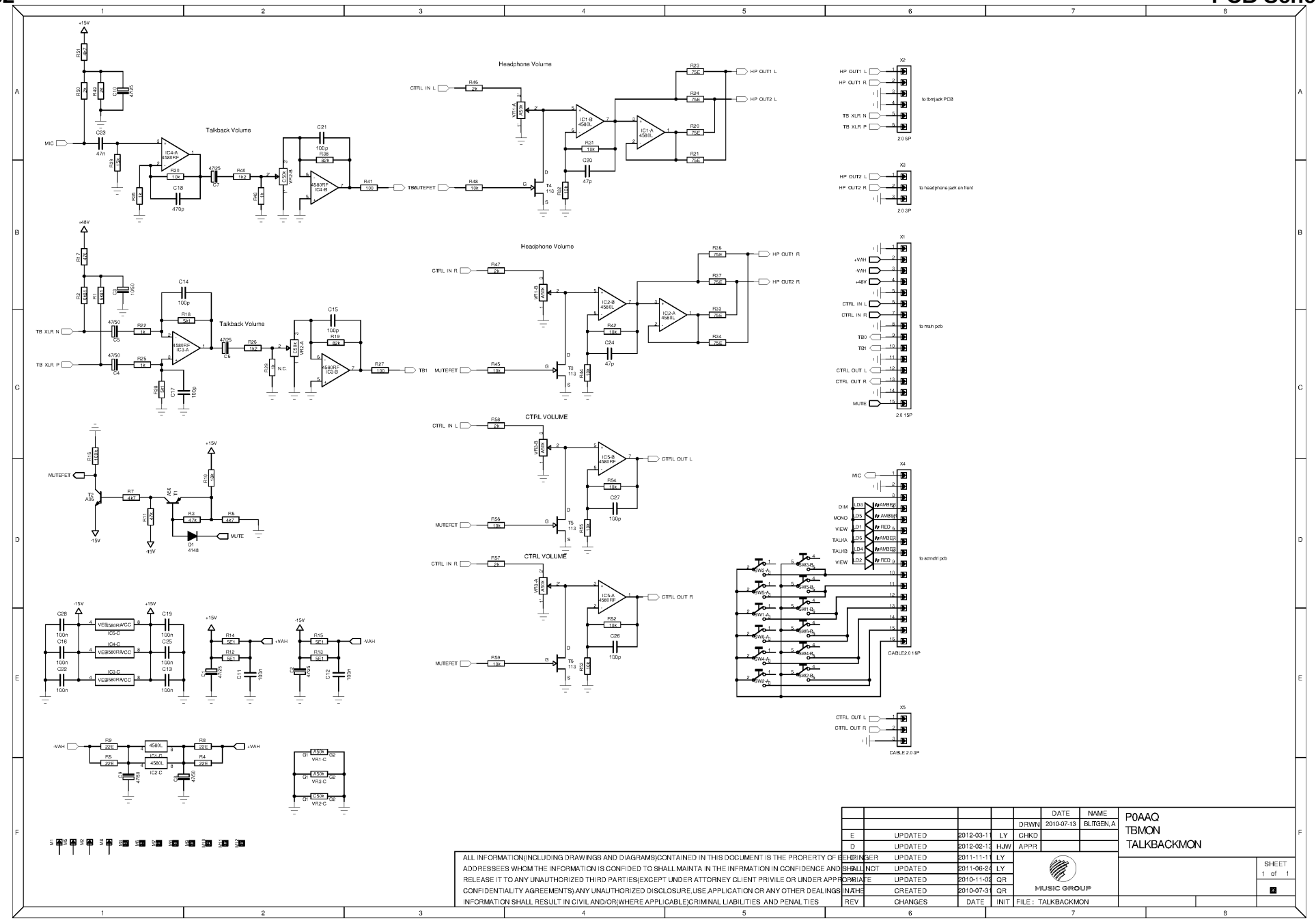
Talkback Volume
Headphone Volume
CTRL VOLUME
MIC
TB XLR N
TB XLR P
MUTEFET
CTRL IN L
CTRL IN R
HP OUT1 L
HP OUT1 R
HP OUT2 L
HP OUT2 R
CTRL OUT L
CTRL OUT R
TB1
TBMUTEFET
MUTE
+15V
-15V
+48V
+VAH
-VAH
X2
to tbmjack PCB
X3
to headphone jack on front
X1
to main pcb
X4
to acmctrl pcb
CABLE2016P
X5
CABLE2003P
P0AAQ
TBMON
TALKBACKMON
DRWN 2010-07-13 BLITGEN, A
CHKD
APPR
SHEET 1 of 1
FILE : TALKBACKMON
MUSIC GROUP
ALL INFORMATION(INCLUDING DRAWINGS AND DIAGRAMS)CONTAINED IN THIS DOCUMENT IS THE PRORERTY OF BEHRINGER
ADDRESSEES WHOM THE INFORMATION IS CONFIDED TO SHALL MAINTA IN THE INFRMATION IN CONFIDENCE AND SHALL NOT
RELEASE IT TO ANY UNAUTHORIZED THIRD PARTIES(EXCEPT UNDER ATTORNEY CLIENT PRIVILE OR UNDER APPROPRIATE
CONFIDENTIALITY AGREEMENTS).ANY UNAUTHORIZED DISCLOSURE,USE,APPLICATION OR ANY OTHER DEALINGS IN THE
INFORMATION SHALL RESULT IN CIVIL AND/OR(WHERE APPLICABLE)CRIMINAL LIABILITIES AND PENALTIES
REV CHANGES DATE INIT
E UPDATED 2012-03-11 LY
D UPDATED 2012-02-13 HJW
UPDATED 2011-11-11 LY
UPDATED 2011-08-23 LY
UPDATED 2010-11-02 QR
CREATED 2010-07-31 QR

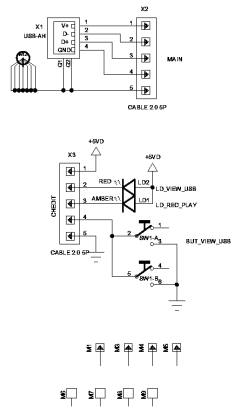

ALL INFORMATION(INCLUDING DRAWINGS AND DIAGRAMS)CONTAINED IN THIS DOCUMENT IS THE PRORERTY OF BEHRINGER ADDRESSEES WHOM THE INFORMATION IS CONFIDED TO SHALL MAINTA IN THE INFRMATION IN CONFIDENCE AND SHALL NOT RELEASE IT TO ANY UNAUTHORIZED THIRD PARTIES(EXCEPT UNDER ATTORNEY CLIENT PRIVILE OR UNDER APPROPRIATE CONFIDENTIALITY AGREEMENTS).ANY UNAUTHORIZED DISCLOSURE,USE,APPLICATION OR ANY OTHER DEALINGS IN THE INFORMATION SHALL RESULT IN CIVIL AND/OR(WHERE APPLICABLE)CRIMINAL LIABILITIES AND PENAL TIES

REV	CHANGES	DATE	INIT
D	UPDATED	2012-02-21	RL
C	UPDATED	2011-11-12	LY
B	UPDATED	2011-06-25	LY
A	UPDATED	2010-11-02	QR
A	CREATED	2010-08-16	QR

	DATE	NAME
DRWN	2010-07-13	KISTERS, T
CHKD		
APPR		

FILE : USB

P0AAQ
12-USBH
USB INPUT

SHEET 1 of 1

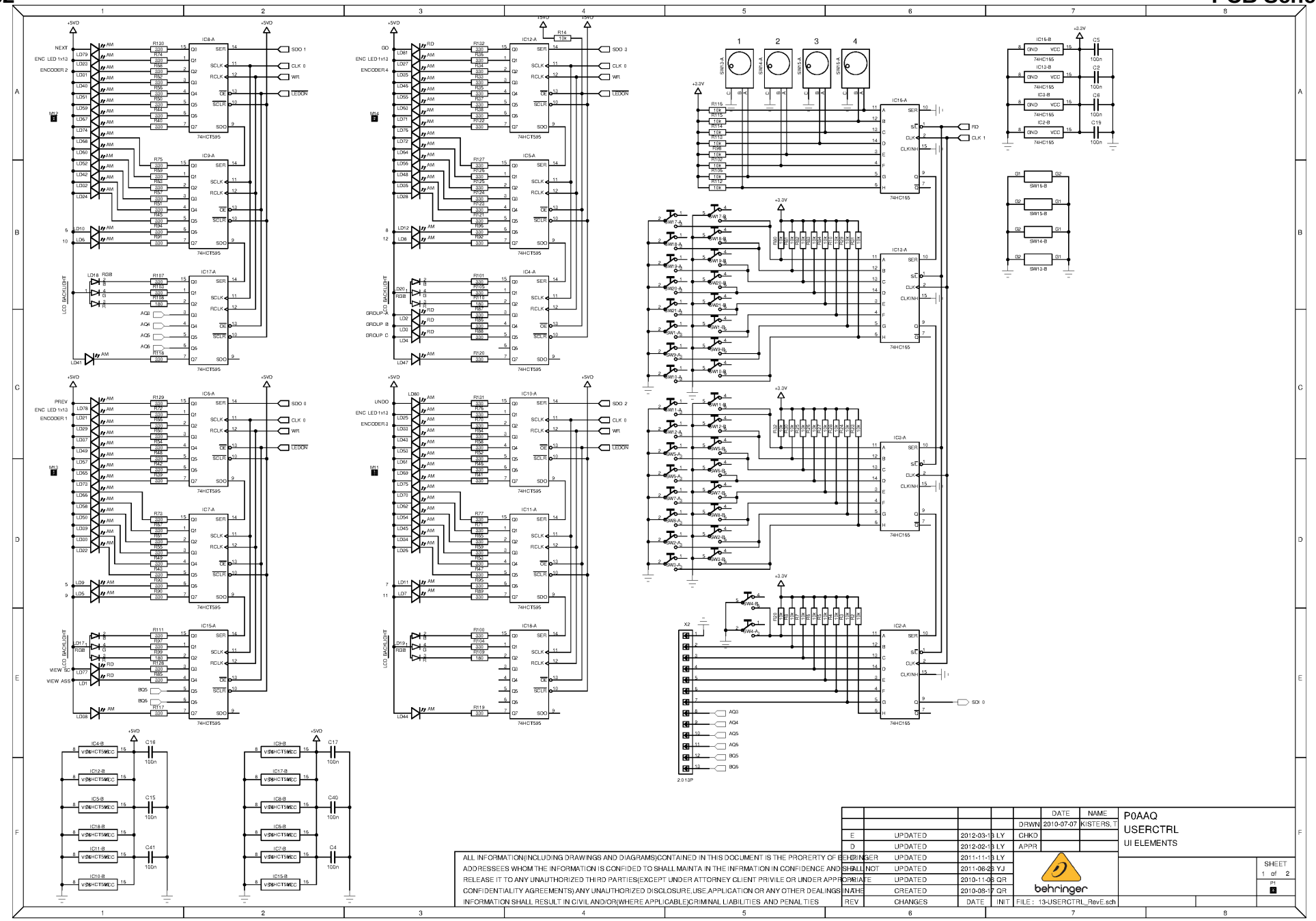
P0AAQ
USERCTRL
UI ELEMENTS
DATE NAME
DRWN 2010-07-07 KISTERS, T
CHKD
APPR
SHEET 1 of 2
behringer
FILE : 13-USERCTRL_RevE.sch
ALL INFORMATION(INCLUDING DRAWINGS AND DIAGRAMS)CONTAINED IN THIS DOCUMENT IS THE PRORERTY OF BEHRINGER
ADDRESSEES WHOM THE INFORMATION IS CONFIDED TO SHALL MAINTA IN THE INFRMATION IN CONFIDENCE AND SHALL NOT
RELEASE IT TO ANY UNAUTHORIZED THIRD PARTIES(EXCEPT UNDER ATTORNEY CLIENT PRIVILE OR UNDER APPROPRIATE
CONFIDENTIALITY AGREEMENTS).ANY UNAUTHORIZED DISCLOSURE,USE,APPLICATION OR ANY OTHER DEALINGS IN THE
INFORMATION SHALL RESULT IN CIVIL AND/OR(WHERE APPLICABLE)CRIMINAL LIABILITIES AND PENALTIES
REV CHANGES DATE INIT
E UPDATED 2012-03-13 LY
D UPDATED 2012-02-13 LY
UPDATED 2011-11-13 LY
UPDATED 2011-06-28 YJ
UPDATED 2010-11-06 QR
CREATED 2010-08-17 QR

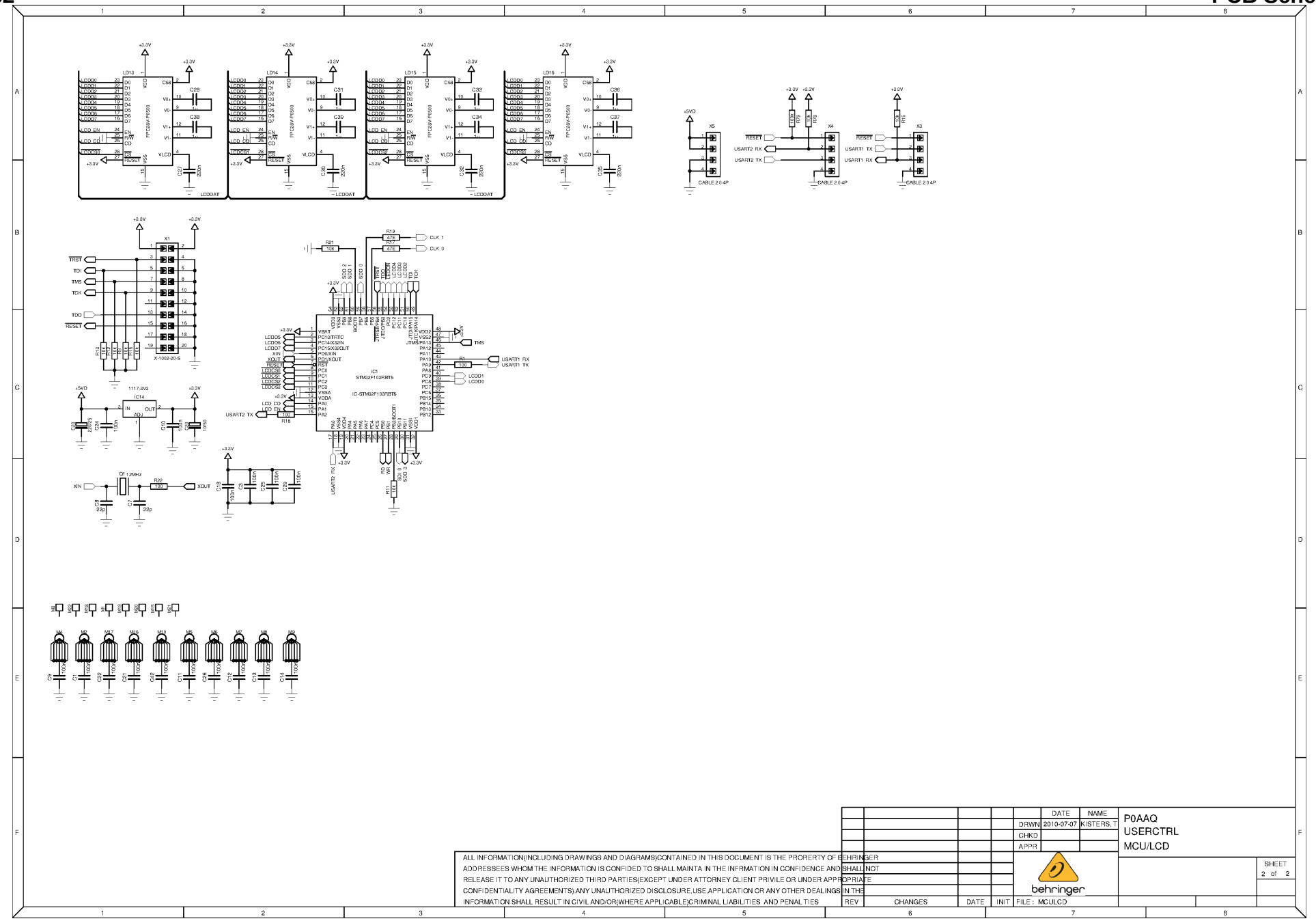

					DATE	NAME	P0AAQ USERCTRL MCU/LCD
				DRWN	2010-07-07	KISTERS, T	
				CHKD			
				APPR			

ALL INFORMATION(INCLUDING DRAWINGS AND DIAGRAMS)CONTAINED IN THIS DOCUMENT IS THE PRORERTY OF BEHRINGER ADDRESSEES WHOM THE INFORMATION IS CONFIDED TO SHALL MAINTA IN THE INFRMATION IN CONFIDENCE AND SHALL NOT RELEASE IT TO ANY UNAUTHORIZED THIRD PARTIES(EXCEPT UNDER ATTORNEY CLIENT PRIVILE OR UNDER APPROPRIATE CONFIDENTIALITY AGREEMENTS).ANY UNAUTHORIZED DISCLOSURE,USE,APPLICATION OR ANY OTHER DEALINGS IN THE INFORMATION SHALL RESULT IN CIVIL AND/OR(WHERE APPLICABLE)CRIMINAL LIABILITIES AND PENALTIES

REV	CHANGES	DATE	INIT	FILE : MCULCD

SHEET 2 of 2

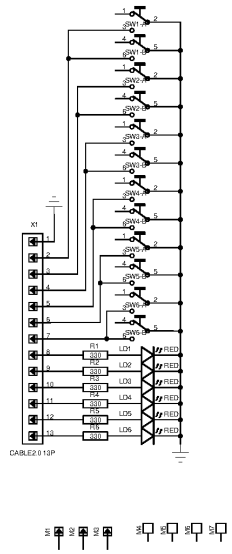

					DATE	NAME
				DRWN	2010-07-07	KISTERS, T
D	UPDATED PCB	2012-02-09	TWM	CHKD		
C	UPDATED PCB	2011-11-18	SQ	APPR		
B	UPDATED PCB	2011-07-29	LY			
A	UPDATED PCB	2011-06-27	LY			
	UPDATED PCB	2010-11-02	QR			
	CREATED PCB	2010-08-20	QR			
REV	CHANGES	DATE	INIT	FILE : 14-MUTEGRP.RevD.sch		

P0AAQ

14-MUTEGRP

SHEET 1 of 1

P1

ALL INFORMATION(INCLUDING DRAWINGS AND DIAGRAMS)CONTAINED IN THIS DOCUMENT IS THE PRORERTY OF BEHRINGER
ADDRESSEES WHOM THE INFORMATION IS CONFIDED TO SHALL MAINTA IN THE INFRMATION IN CONFIDENCE AND SHALL NOT
RELEASE IT TO ANY UNAUTHORIZED THIRD PARTIES(EXCEPT UNDER ATTORNEY CLIENT PRIVILE OR UNDER APPROPRIATE
CONFIDENTIALITY AGREEMENTS) ANY UNAUTHORIZED DISCLOSURE,USE,APPLICATION OR ANY OTHER DEALINGS IN THE
INFORMATION SHALL RESULT IN CIVIL AND/OR(WHERE APPLICABLE)CRIMINAL LIABILITIES AND PENALTIES

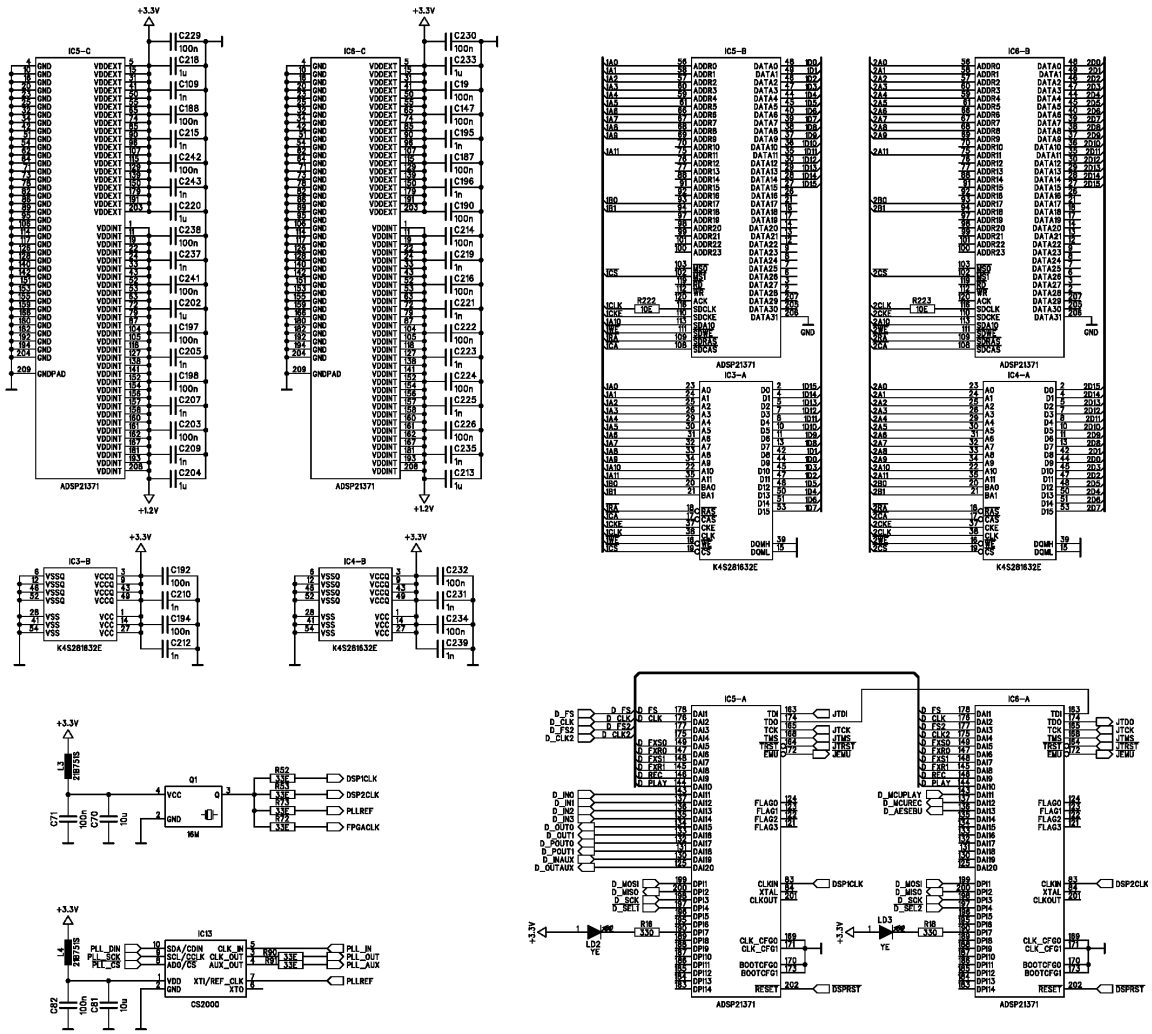

	C29	R70	R72
P0AAQ	2.2uF	4k	1k
P0AAP	3.3uF	2k	1.8k

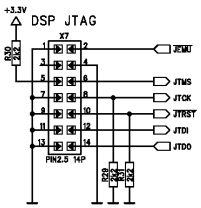

REV	CHANGES	DATE	INIT
F	Modify the LoM	2013-04-19	YZP
E	Modify the LoM	2012-03-13	RL
D	Modify the LoM	2012-02-10	CH
C	Modify the LoM	2011-11-07	L-Den
B	UPDATED	2011-06-28	LY
A	UPDATED	2010-10-31	QR
A	CREATED	2010-08-21	YJ
A	CREATED	2011-09-28	CH

	DATE	NAME
DRWN	2010-07-09	ZINT, T
CHKD		
APPR		

FILE : DSP/RAM/CLOCK

MUSIC GROUP

P0AAQ
15-MAIN
DSP/RAM/CLOCK

BEHRINGER

SHEET 1 of 5

ALL INFORMATION (INCLUDING DRAWINGS AND DIAGRAMS) CONTAINED IN THIS DOCUMENT IS THE PROPERTY OF MUSIC GROUP. ADDRESSEES WHOM THE INFORMATION IS CONFIDED TO SHALL MAINTAIN THE INFORMATION IN CONFIDENCE AND SHALL NOT RELEASE IT TO ANY UNAUTHORIZED THIRD PARTIES (EXCEPT UNDER ATTORNEY CLIENT PRIVILEGE OR UNDER APPROPRIATE CONFIDENTIALITY AGREEMENTS). ANY UNAUTHORIZED DISCLOSURE, USE, APPLICATION OR ANY OTHER DEALINGS IN THE INFORMATION SHALL RESULT IN CIVIL AND/OR CRIMINAL LIABILITIES AND PENALTIES.

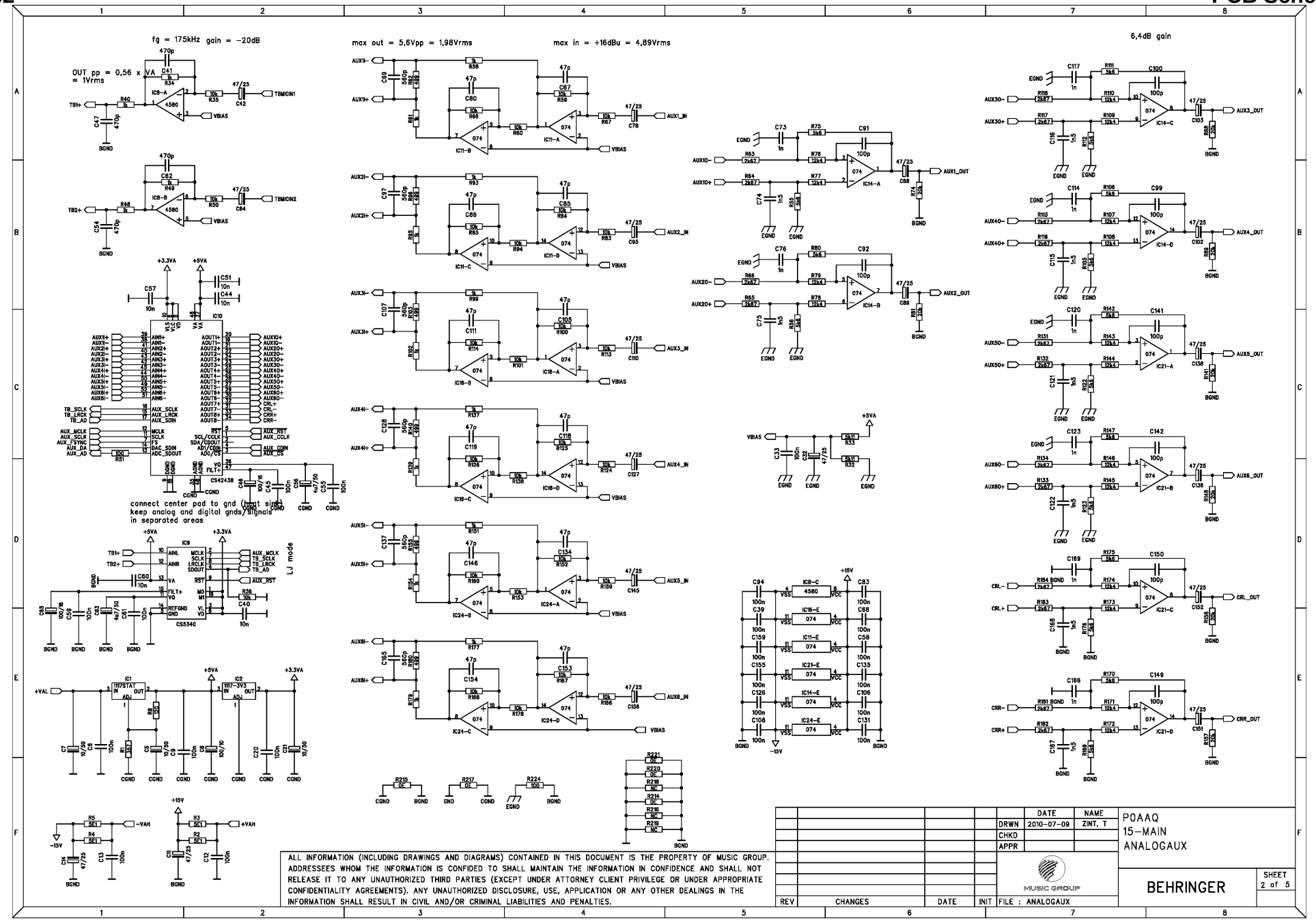
fg = 175kHz gain = -20dB
OUT pp = 0,56 x VA = 1Vrms
max out = 5,6Vpp = 1,98Vrms
max in = +16dBu = 4,89Vrms
6,4dB gain
connect center pad to gnd (input sig.)
keep analog and digital gnds/signals in separated areas
LJ mode
ALL INFORMATION (INCLUDING DRAWINGS AND DIAGRAMS) CONTAINED IN THIS DOCUMENT IS THE PROPERTY OF MUSIC GROUP. ADDRESSEES WHOM THE INFORMATION IS CONFIDED TO SHALL MAINTAIN THE INFORMATION IN CONFIDENCE AND SHALL NOT RELEASE IT TO ANY UNAUTHORIZED THIRD PARTIES (EXCEPT UNDER ATTORNEY CLIENT PRIVILEGE OR UNDER APPROPRIATE CONFIDENTIALITY AGREEMENTS). ANY UNAUTHORIZED DISCLOSURE, USE, APPLICATION OR ANY OTHER DEALINGS IN THE INFORMATION SHALL RESULT IN CIVIL AND/OR CRIMINAL LIABILITIES AND PENALTIES.
DATE NAME
DRWN 2010-07-09 ZINT, T
CHKD
APPR
POAAQ
15-MAIN
ANALOGAUX
MUSIC GROUP
BEHRINGER
SHEET 2 of 5
REV CHANGES DATE INIT FILE : ANALOGAUX

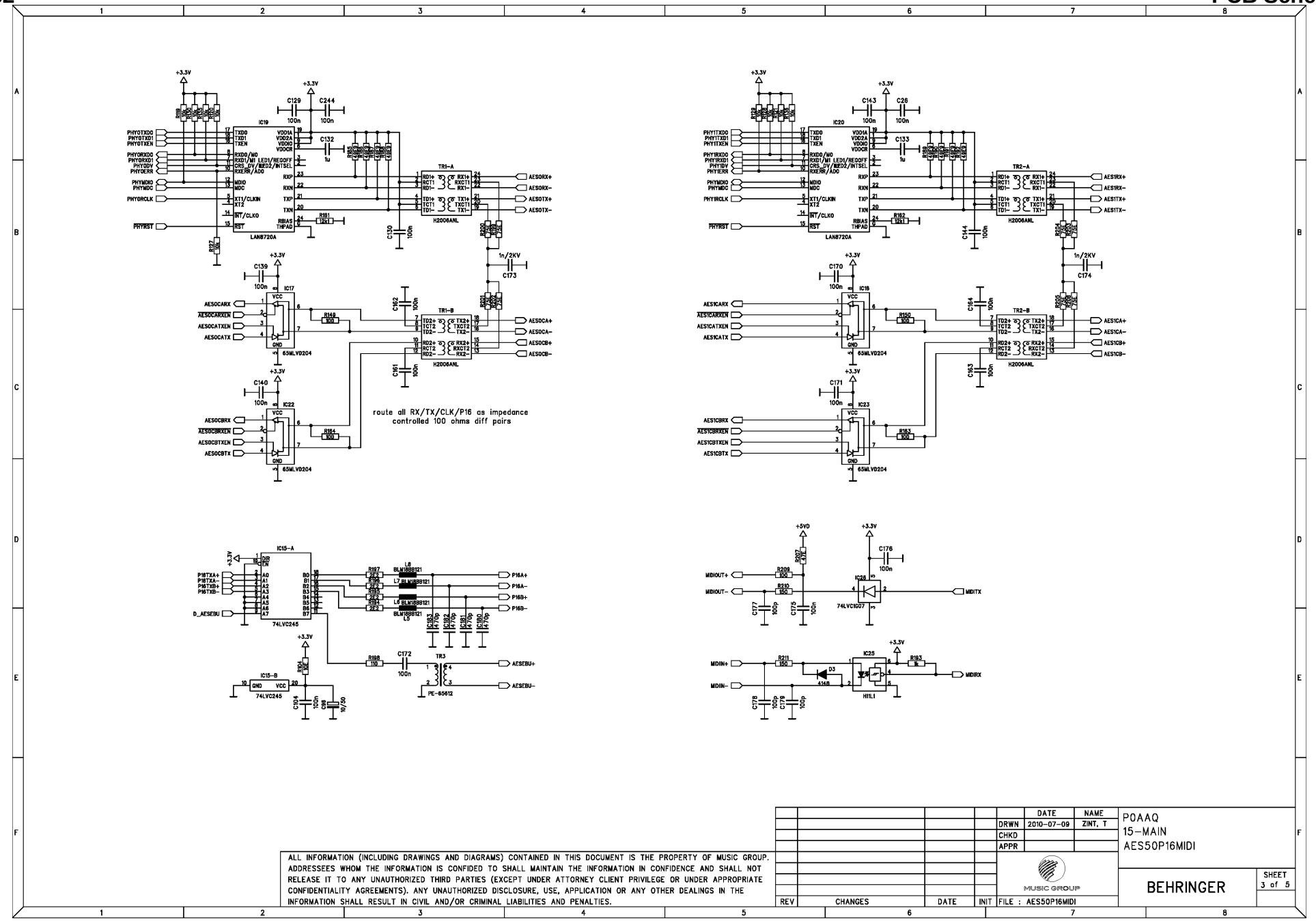

	DATE	NAME
DRWN	2010-07-09	ZINT, T
CHKD		
APPR		

P0AAQ
15-MAIN
AES50P16MIDI

MUSIC GROUP

BEHRINGER

SHEET 3 of 5

FILE : AES50P16MIDI

REV	CHANGES	DATE	INIT

ALL INFORMATION (INCLUDING DRAWINGS AND DIAGRAMS) CONTAINED IN THIS DOCUMENT IS THE PROPERTY OF MUSIC GROUP. ADDRESSEES WHOM THE INFORMATION IS CONFIDED TO SHALL MAINTAIN THE INFORMATION IN CONFIDENCE AND SHALL NOT RELEASE IT TO ANY UNAUTHORIZED THIRD PARTIES (EXCEPT UNDER ATTORNEY CLIENT PRIVILEGE OR UNDER APPROPRIATE CONFIDENTIALITY AGREEMENTS). ANY UNAUTHORIZED DISCLOSURE, USE, APPLICATION OR ANY OTHER DEALINGS IN THE INFORMATION SHALL RESULT IN CIVIL AND/OR CRIMINAL LIABILITIES AND PENALTIES.

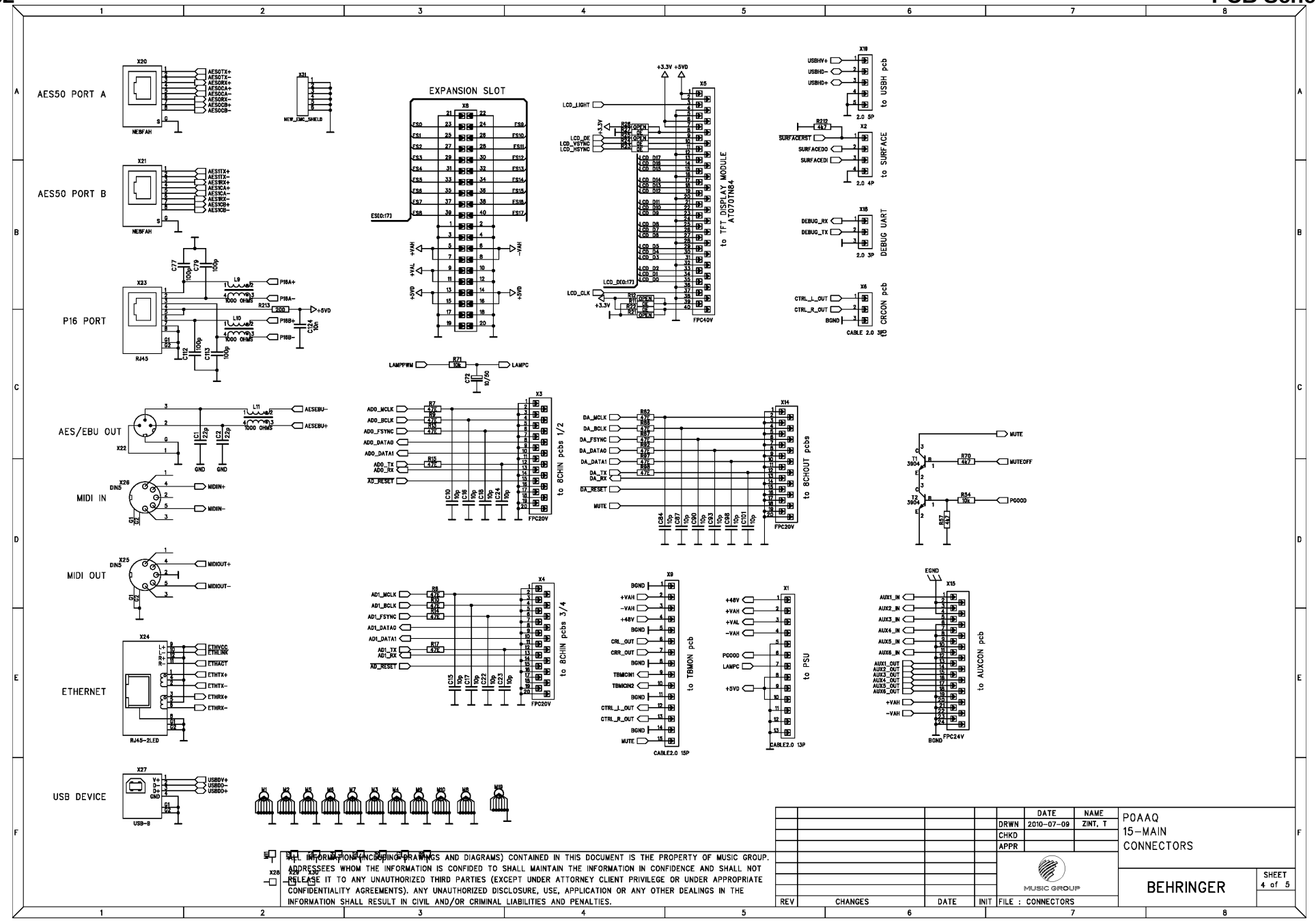
AES50 PORT A
AES50 PORT B
P16 PORT
AES/EBU OUT
MIDI IN
MIDI OUT
ETHERNET
USB DEVICE
EXPANSION SLOT
to TFT DISPLAY MODULE
to USBH pcb
to SURFACE
DEBUG UART
to CRCON pcb
to 8CHIN pcbs 1/2
to 8CHOUT pcbs
to 8CHIN pcbs 3/4
to TBMON pcb
to PSU
to AUXCON pcb
ALL INFORMATION (INCLUDING DRAWINGS AND DIAGRAMS) CONTAINED IN THIS DOCUMENT IS THE PROPERTY OF MUSIC GROUP. ADDRESSEES WHOM THE INFORMATION IS CONFIDED TO SHALL MAINTAIN THE INFORMATION IN CONFIDENCE AND SHALL NOT RELEASE IT TO ANY UNAUTHORIZED THIRD PARTIES (EXCEPT UNDER ATTORNEY CLIENT PRIVILEGE OR UNDER APPROPRIATE CONFIDENTIALITY AGREEMENTS). ANY UNAUTHORIZED DISCLOSURE, USE, APPLICATION OR ANY OTHER DEALINGS IN THE INFORMATION SHALL RESULT IN CIVIL AND/OR CRIMINAL LIABILITIES AND PENALTIES.
DATE NAME
DRWN 2010-07-09 ZINT, T
CHKD
APPR
POAAQ
15-MAIN
CONNECTORS
MUSIC GROUP
BEHRINGER
SHEET 4 of 5
REV CHANGES DATE INIT FILE : CONNECTORS

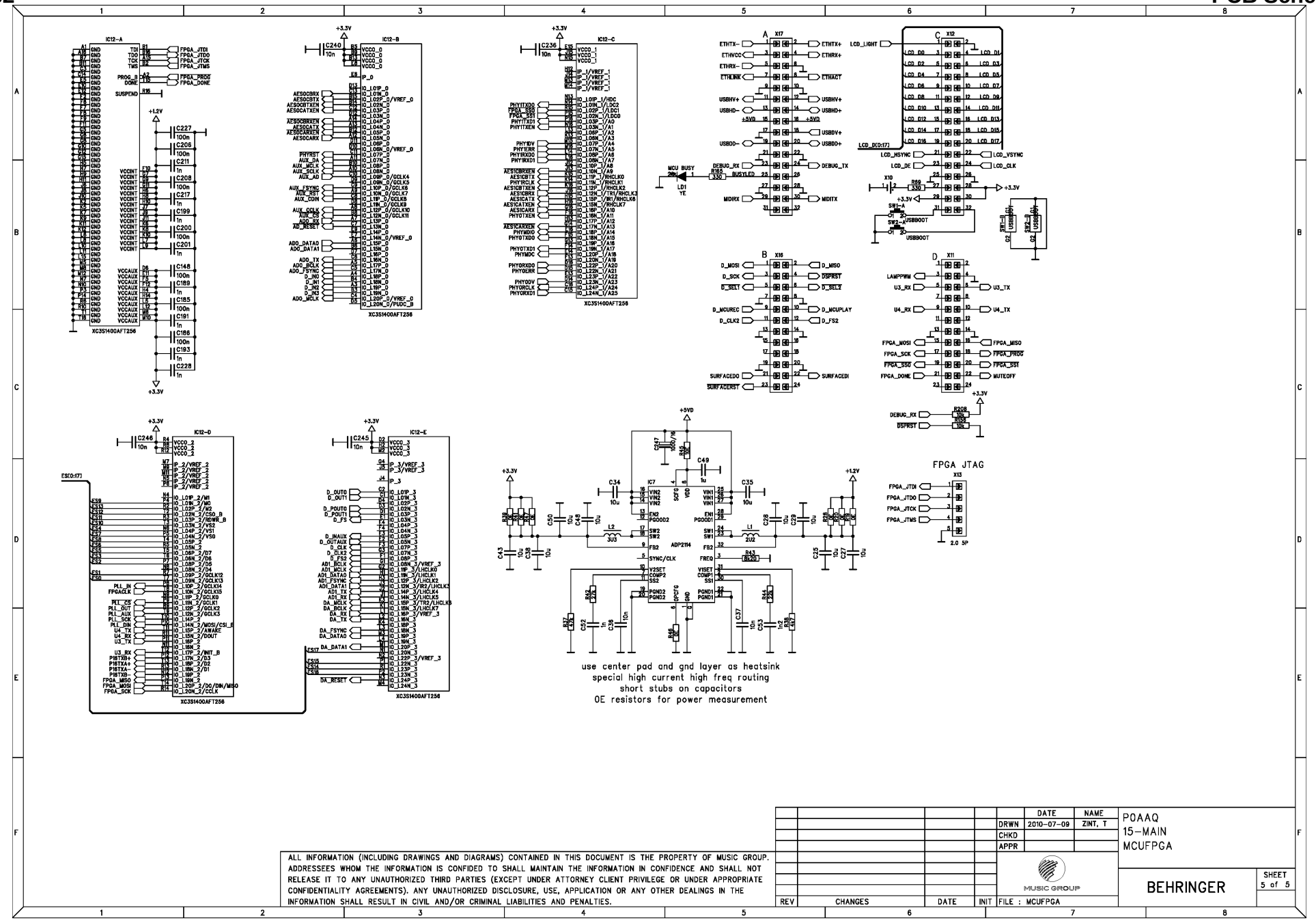

ALL INFORMATION (INCLUDING DRAWINGS AND DIAGRAMS) CONTAINED IN THIS DOCUMENT IS THE PROPERTY OF MUSIC GROUP. ADDRESSEES WHOM THE INFORMATION IS CONFIDED TO SHALL MAINTAIN THE INFORMATION IN CONFIDENCE AND SHALL NOT RELEASE IT TO ANY UNAUTHORIZED THIRD PARTIES (EXCEPT UNDER ATTORNEY CLIENT PRIVILEGE OR UNDER APPROPRIATE CONFIDENTIALITY AGREEMENTS). ANY UNAUTHORIZED DISCLOSURE, USE, APPLICATION OR ANY OTHER DEALINGS IN THE INFORMATION SHALL RESULT IN CIVIL AND/OR CRIMINAL LIABILITIES AND PENALTIES.

REV	CHANGES	DATE	INIT

	DATE	NAME
DRWN	2010-07-09	ZINT, T
CHKD		
APPR		

MUSIC GROUP

FILE : MCUFPGA

P0AAQ
15-MAIN
MCUFPGA

BEHRINGER

SHEET 5 of 5

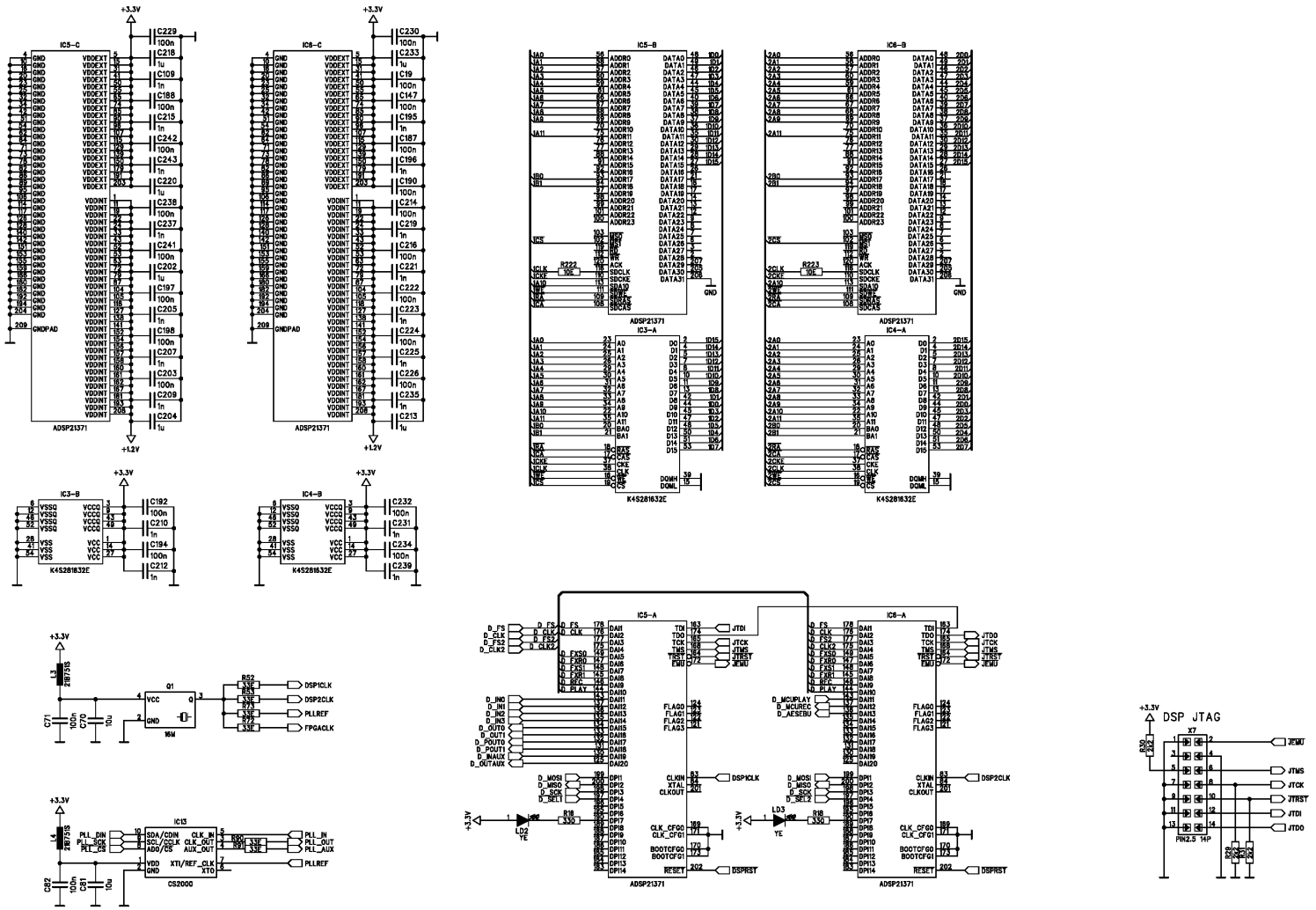

F	Modify the LoM	2013-04-19	YZP		DATE	NAME
E	Modify the LoM	2012-03-13	RL	DRWN	2010-07-09	ZINT, T
D	Modify the LoM	2012-02-10	CH	CHKD		
C	Modify the LoM	2011-11-07	L-Den	APPR		
B	UPDATED	2011-06-28	LY			
A	UPDATED	2010-10-31	QR			
A	CREATED	2010-08-21	YJ			
A	CREATED	2011-09-28	CH			
REV	CHANGES	DATE	INIT	FILE : DSP/RAM/CLOCK		

P0AAQ
15-MAIN
DSP/RAM/CLOCK

BEHRINGER

MUSIC GROUP

SHEET 1 of 5

ALL INFORMATION (INCLUDING DRAWINGS AND DIAGRAMS) CONTAINED IN THIS DOCUMENT IS THE PROPERTY OF MUSIC GROUP. ADDRESSEES WHOM THE INFORMATION IS CONFIDED TO SHALL MAINTAIN THE INFORMATION IN CONFIDENCE AND SHALL NOT RELEASE IT TO ANY UNAUTHORIZED THIRD PARTIES (EXCEPT UNDER ATTORNEY CLIENT PRIVILEGE OR UNDER APPROPRIATE CONFIDENTIALITY AGREEMENTS). ANY UNAUTHORIZED DISCLOSURE, USE, APPLICATION OR ANY OTHER DEALINGS IN THE INFORMATION SHALL RESULT IN CIVIL AND/OR CRIMINAL LIABILITIES AND PENALTIES.

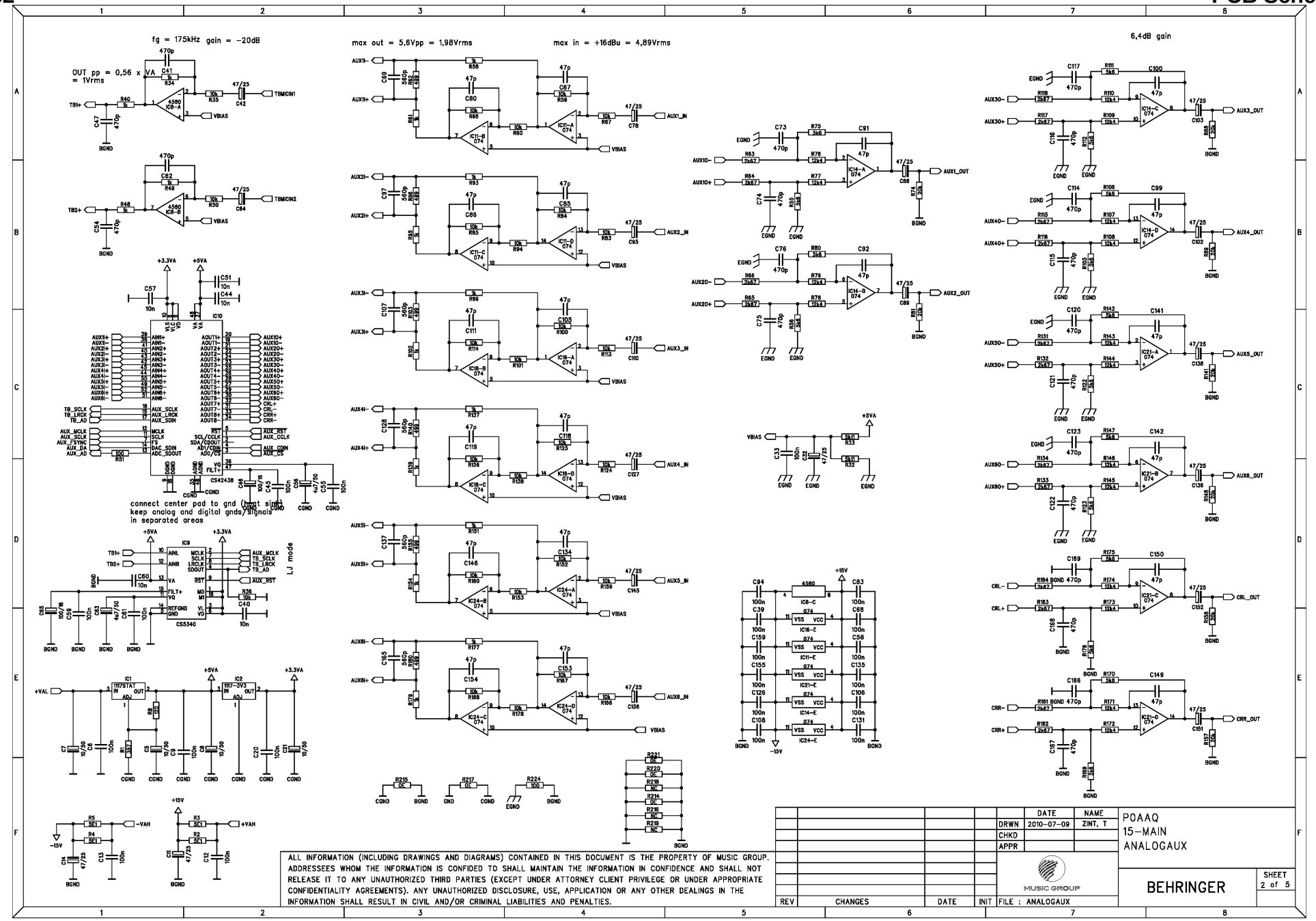
fg = 175kHz gain = -20dB
OUT pp = 0,56 x VA = 1Vrms
max out = 5,6Vpp = 1,98Vrms
max in = +16dBu = 4,89Vrms
6,4dB gain
connect center pad to gnd (input sig.)
keep analog and digital gnds/signals in separated areas
LJ mode
ALL INFORMATION (INCLUDING DRAWINGS AND DIAGRAMS) CONTAINED IN THIS DOCUMENT IS THE PROPERTY OF MUSIC GROUP. ADDRESSEES WHOM THE INFORMATION IS CONFIDED TO SHALL MAINTAIN THE INFORMATION IN CONFIDENCE AND SHALL NOT RELEASE IT TO ANY UNAUTHORIZED THIRD PARTIES (EXCEPT UNDER ATTORNEY CLIENT PRIVILEGE OR UNDER APPROPRIATE CONFIDENTIALITY AGREEMENTS). ANY UNAUTHORIZED DISCLOSURE, USE, APPLICATION OR ANY OTHER DEALINGS IN THE INFORMATION SHALL RESULT IN CIVIL AND/OR CRIMINAL LIABILITIES AND PENALTIES.
DATE NAME
DRWN 2010-07-09 ZINT, T
CHKD
APPR
MUSIC GROUP
REV CHANGES DATE INIT
FILE : ANALOGAUX
P0AAQ
15-MAIN
ANALOGAUX
BEHRINGER
SHEET 2 of 5

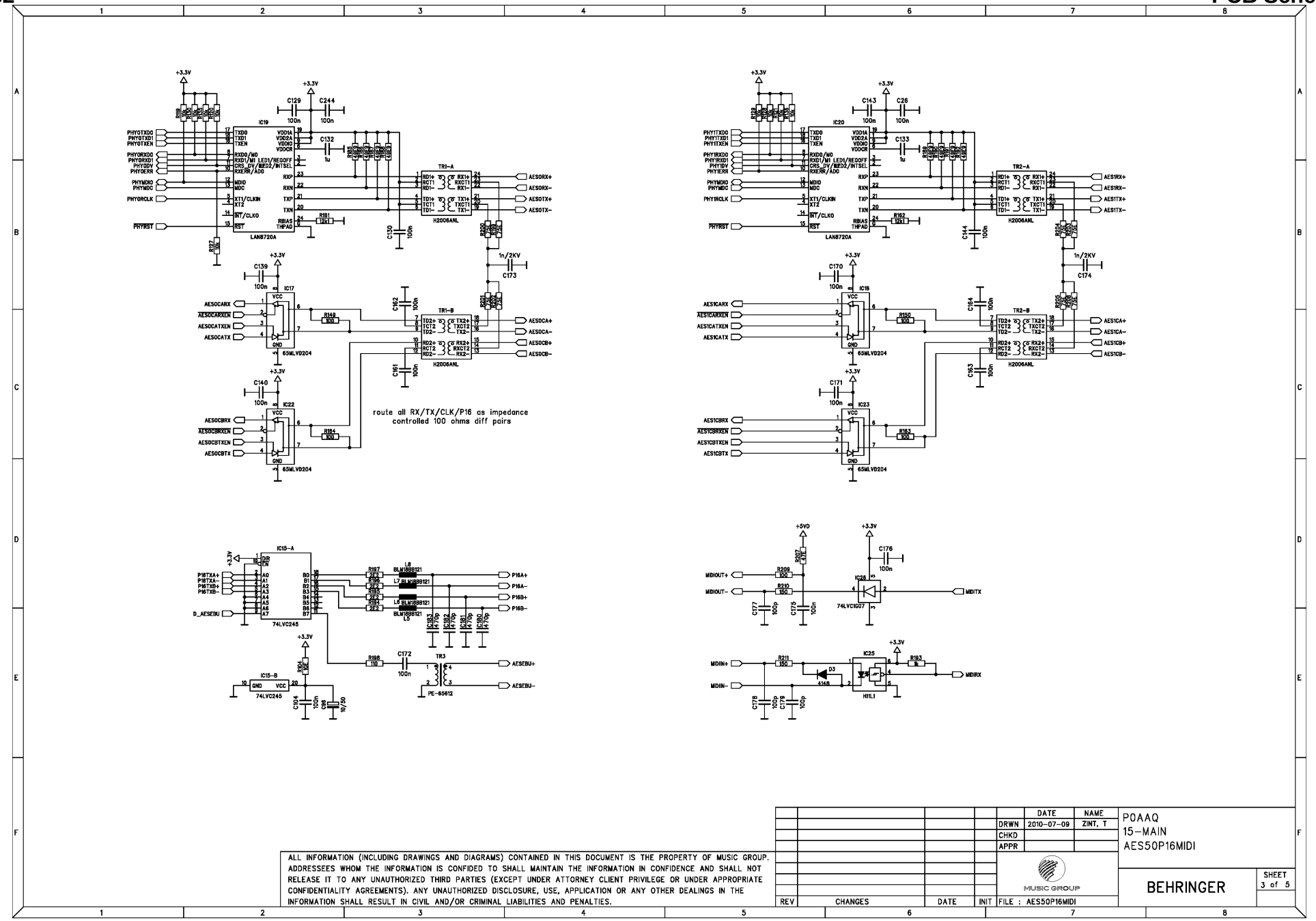

					DATE	NAME
				DRWN	2010-07-09	ZINT, T
				CHKD		
				APPR		

P0AAQ
15-MAIN
AES50P16MIDI

MUSIC GROUP

BEHRINGER

SHEET 3 of 5

REV	CHANGES	DATE	INIT

FILE : AES50P16MIDI

ALL INFORMATION (INCLUDING DRAWINGS AND DIAGRAMS) CONTAINED IN THIS DOCUMENT IS THE PROPERTY OF MUSIC GROUP. ADDRESSEES WHOM THE INFORMATION IS CONFIDED TO SHALL MAINTAIN THE INFORMATION IN CONFIDENCE AND SHALL NOT RELEASE IT TO ANY UNAUTHORIZED THIRD PARTIES (EXCEPT UNDER ATTORNEY CLIENT PRIVILEGE OR UNDER APPROPRIATE CONFIDENTIALITY AGREEMENTS). ANY UNAUTHORIZED DISCLOSURE, USE, APPLICATION OR ANY OTHER DEALINGS IN THE INFORMATION SHALL RESULT IN CIVIL AND/OR CRIMINAL LIABILITIES AND PENALTIES.

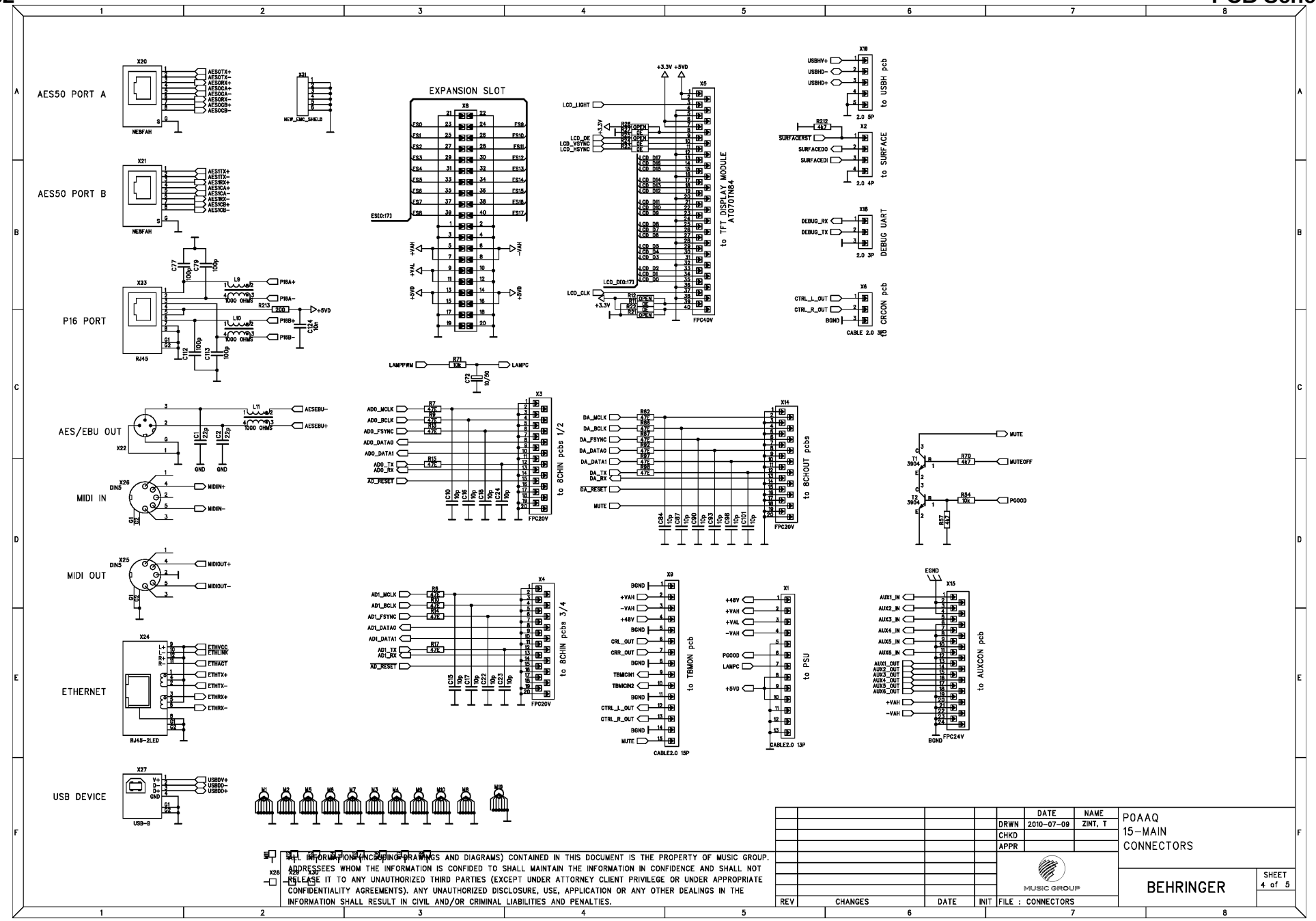
AES50 PORT A
AES50 PORT B
P16 PORT
AES/EBU OUT
MIDI IN
MIDI OUT
ETHERNET
USB DEVICE
EXPANSION SLOT
to TFT DISPLAY MODULE
to USBH pcb
to SURFACE
DEBUG UART
to CRCON pcb
to 8CHIN pcbs 1/2
to 8CHOUT pcbs
to 8CHIN pcbs 3/4
to TBMON pcb
to PSU
to AUXCON pcb
ALL INFORMATION (INCLUDING DRAWINGS AND DIAGRAMS) CONTAINED IN THIS DOCUMENT IS THE PROPERTY OF MUSIC GROUP. ADDRESSEES WHOM THE INFORMATION IS CONFIDED TO SHALL MAINTAIN THE INFORMATION IN CONFIDENCE AND SHALL NOT RELEASE IT TO ANY UNAUTHORIZED THIRD PARTIES (EXCEPT UNDER ATTORNEY CLIENT PRIVILEGE OR UNDER APPROPRIATE CONFIDENTIALITY AGREEMENTS). ANY UNAUTHORIZED DISCLOSURE, USE, APPLICATION OR ANY OTHER DEALINGS IN THE INFORMATION SHALL RESULT IN CIVIL AND/OR CRIMINAL LIABILITIES AND PENALTIES.
DATE NAME
DRWN 2010-07-09 ZINT, T
CHKD
APPR
POAAQ
15-MAIN
CONNECTORS
MUSIC GROUP
BEHRINGER
SHEET 4 of 5
REV CHANGES DATE INIT FILE : CONNECTORS

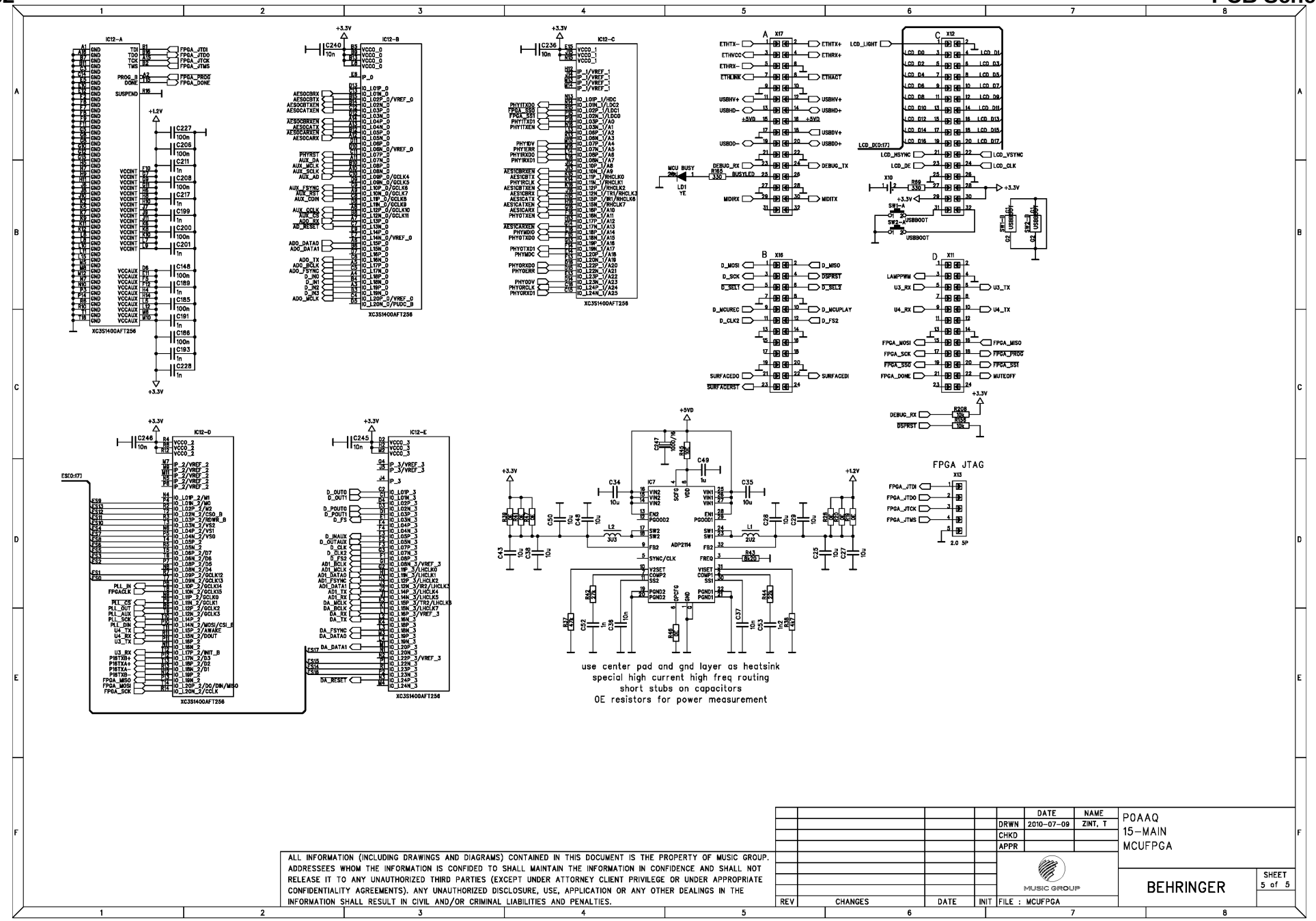

ALL INFORMATION (INCLUDING DRAWINGS AND DIAGRAMS) CONTAINED IN THIS DOCUMENT IS THE PROPERTY OF MUSIC GROUP. ADDRESSEES WHOM THE INFORMATION IS CONFIDED TO SHALL MAINTAIN THE INFORMATION IN CONFIDENCE AND SHALL NOT RELEASE IT TO ANY UNAUTHORIZED THIRD PARTIES (EXCEPT UNDER ATTORNEY CLIENT PRIVILEGE OR UNDER APPROPRIATE CONFIDENTIALITY AGREEMENTS). ANY UNAUTHORIZED DISCLOSURE, USE, APPLICATION OR ANY OTHER DEALINGS IN THE INFORMATION SHALL RESULT IN CIVIL AND/OR CRIMINAL LIABILITIES AND PENALTIES.

REV	CHANGES	DATE	INIT

	DATE	NAME
DRWN	2010-07-09	ZINT, T
CHKD		
APPR		

MUSIC GROUP

FILE : MCUFPGA

P0AAQ
15-MAIN
MCUFPGA

BEHRINGER

SHEET 5 of 5

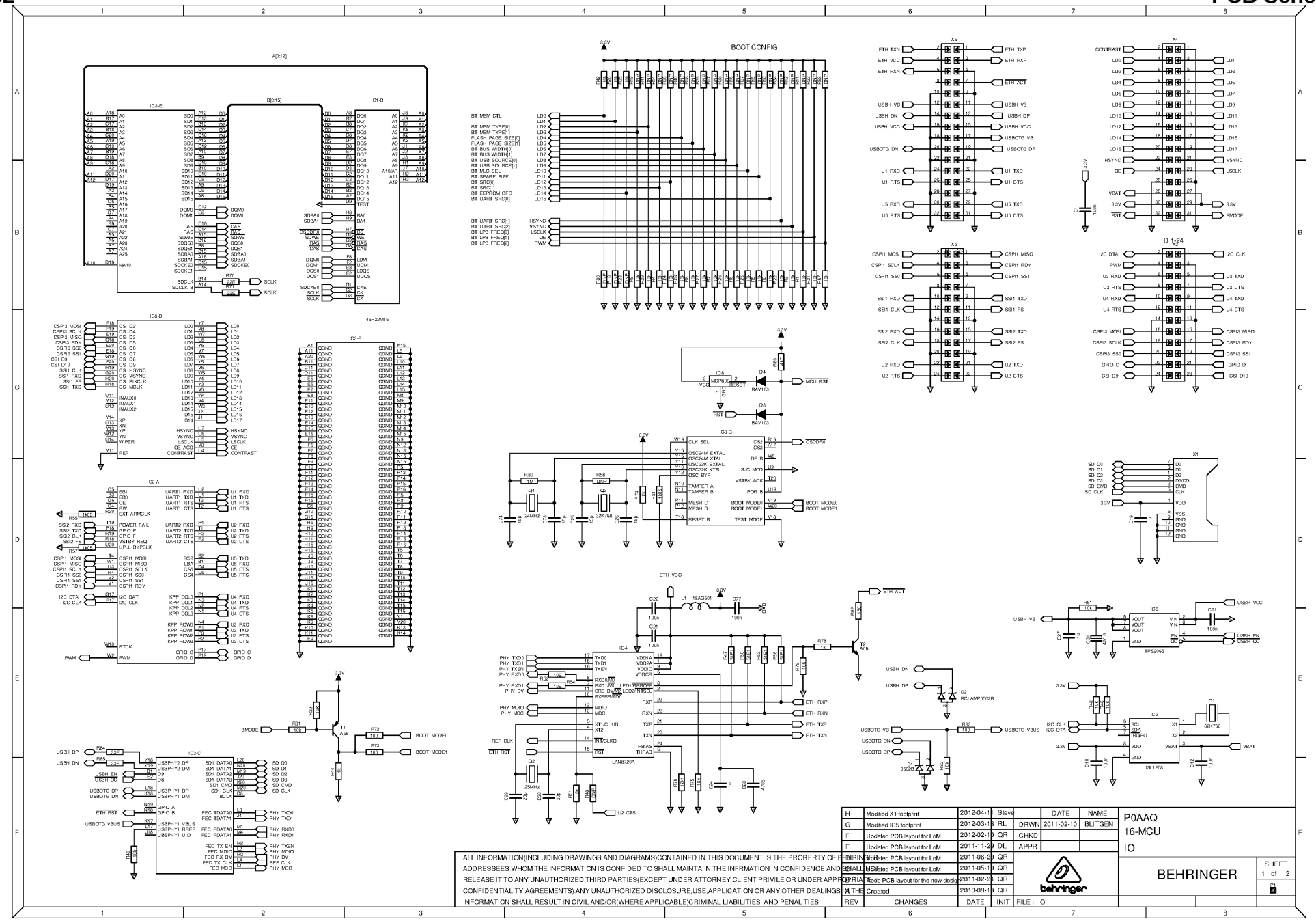
BOOT CONFIG
IC3-E
IC1-B
IC3-D
IC3-F
IC3-A
IC3-C
IC3-G
IC4
IC5
IC2
X5
X4
X1
D 1-24
ETH VCC
LAN8720A
TPS2055
ISL1208
BEHRINGER
P0AAQ
16-MCU
IO
SHEET 1 of 2
DATE 2011-02-10
DRWN BLITGEN
CHKD
APPR
FILE : IO
ALL INFORMATION(INCLUDING DRAWINGS AND DIAGRAMS)CONTAINED IN THIS DOCUMENT IS THE PRORERTY OF BEHRINGER
ADDRESSEES WHOM THE INFORMATION IS CONFIDENTIAL TO SHALL MAINTA IN THE INFORMATION IN CONFIDENCE AND SHALL NOT
RELEASE IT TO ANY UNAUTHORIZED THIRD PARTIES(EXCEPT UNDER ATTORNEY CLIENT PRIVILE OR UNDER APPROPRIATE
CONFIDENTIALITY AGREEMENTS).ANY UNAUTHORIZED DISCLOSURE,USE,APPLICATION OR ANY OTHER DEALINGS IN THE
INFORMATION SHALL RESULT IN CIVIL AND/OR(WHERE APPLICABLE)CRIMINAL LIABILITIES AND PENALTIES
REV CHANGES DATE INIT
H Modified X1 footprint 2012-04-11 Steve
G Modified IC5 footprint 2012-03-13 RL
F Updated PCB layout for LoM 2012-02-10 QR
E Updated PCB layout for LoM 2011-11-29 DL
D Updated PCB layout for LoM 2011-06-29 QR
C Updated PCB layout for LoM 2011-05-10 QR
B Updated PCB layout for the new design 2011-02-24 QR
A Created 2010-08-13 QR

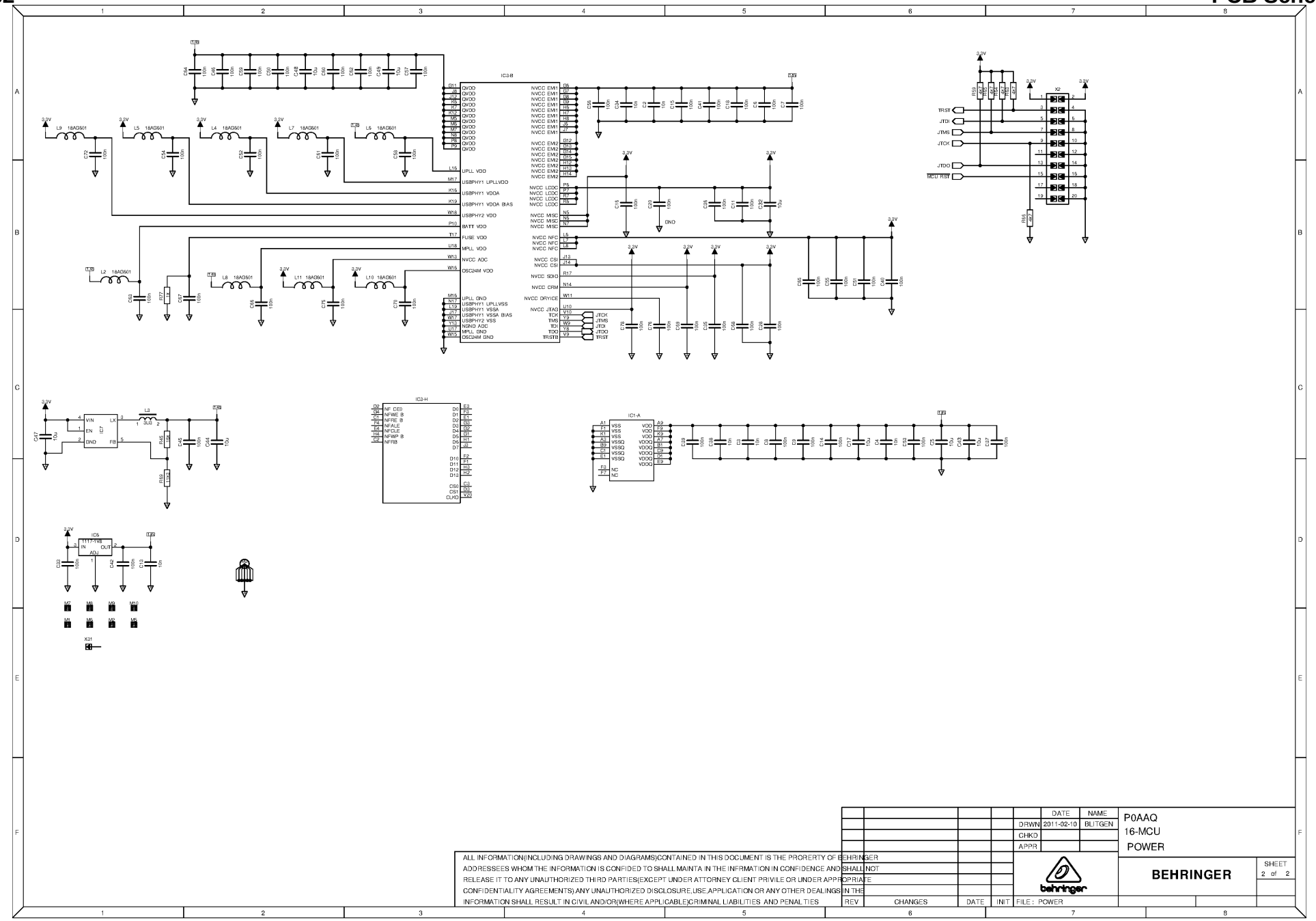
IC3-B
IC3-H
IC1-A
IC7
IC6
X2
X31
TRST
JTDI
JTMS
JTCK
JTDO
MCU RST
ALL INFORMATION(INCLUDING DRAWINGS AND DIAGRAMS)CONTAINED IN THIS DOCUMENT IS THE PRORERTY OF BEHRINGER
ADDRESSEES WHOM THE INFORMATION IS CONFIDED TO SHALL MAINTA IN THE INFRMATION IN CONFIDENCE AND SHALL NOT
RELEASE IT TO ANY UNAUTHORIZED THIRD PARTIES(EXCEPT UNDER ATTORNEY CLIENT PRIVILE OR UNDER APPROPRIATE
CONFIDENTIALITY AGREEMENTS).ANY UNAUTHORIZED DISCLOSURE,USE,APPLICATION OR ANY OTHER DEALINGS IN THE
INFORMATION SHALL RESULT IN CIVIL AND/OR(WHERE APPLICABLE)CRIMINAL LIABILITIES AND PENALTIES
DATE NAME
DRWN 2011-02-10 BLITGEN
CHKD
APPR
P0AAQ
16-MCU
POWER
BEHRINGER
SHEET 2 of 2
REV CHANGES DATE INIT
FILE : POWER

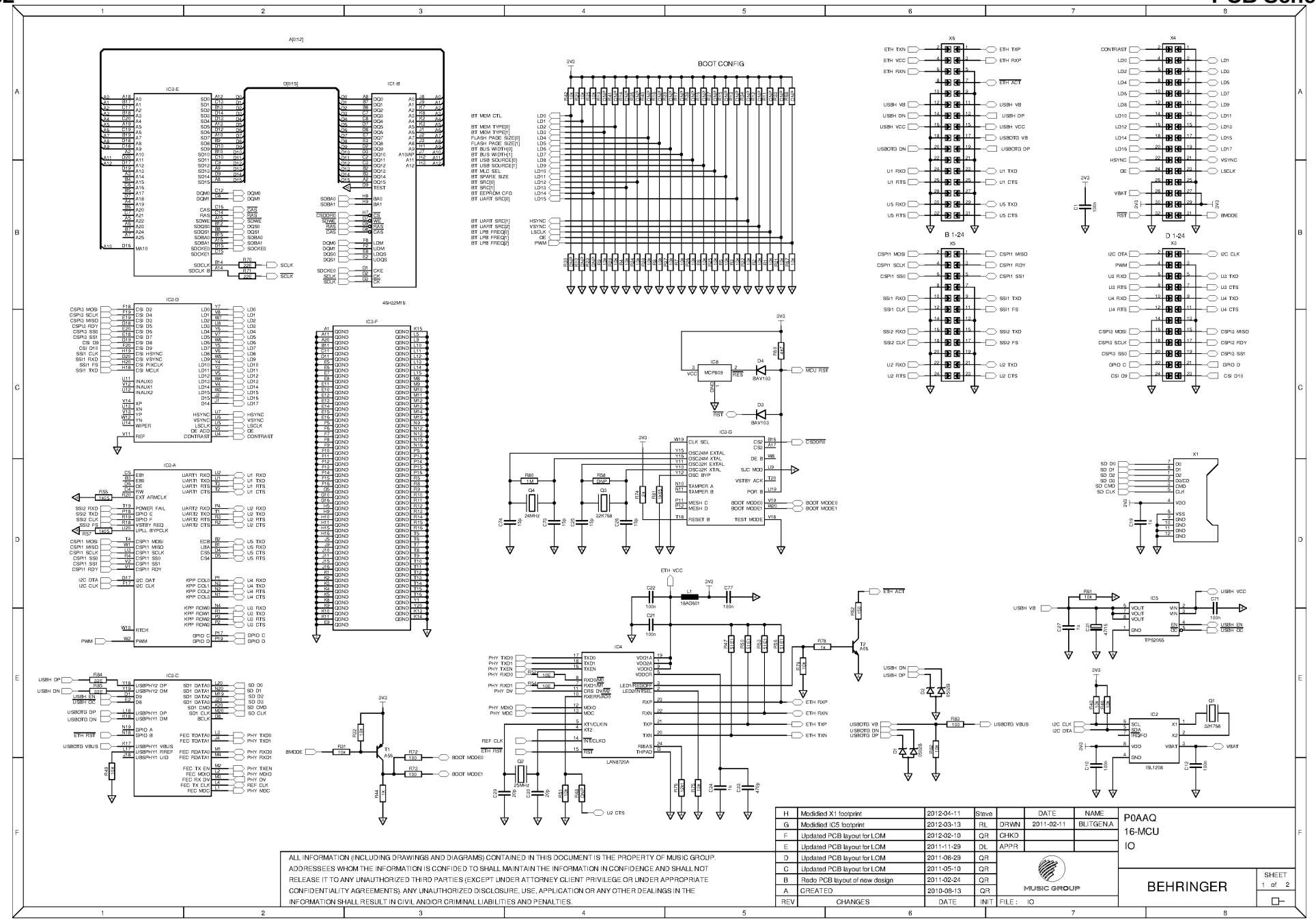
BOOT CONFIG
IC3-E
IC1-B
IC3-D
IC3-F
IC3-A
IC3-C
IC8
IC3-G
IC4
LAN8720A
X6
X4
X5
X3
X1
IC5
IC2
ISL1208
TPS2065
B 1-24
D 1-24
ALL INFORMATION (INCLUDING DRAWINGS AND DIAGRAMS) CONTAINED IN THIS DOCUMENT IS THE PROPERTY OF MUSIC GROUP.
ADDRESSEES WHOM THE INFORMATION IS CONFIDED TO SHALL MAINTAIN THE INFORMATION IN CONFIDENCE AND SHALL NOT
RELEASE IT TO ANY UNAUTHORIZED THIRD PARTIES (EXCEPT UNDER ATTORNEY CLIENT PRIVILEGE OR UNDER APPROPRIATE
CONFIDENTIALITY AGREEMENTS). ANY UNAUTHORIZED DISCLOSURE, USE, APPLICATION OR ANY OTHER DEALINGS IN THE
INFORMATION SHALL RESULT IN CIVIL AND/OR CRIMINAL LIABILITIES AND PENALTIES.
H Modidified X1 footprint 2012-04-11 Steve
G Modidified IC5 footprint 2012-03-13 RL
F Updated PCB layout for LOM 2012-02-10 QR
E Updated PCB layout for LOM 2011-11-29 DL
D Updated PCB layout for LOM 2011-06-29 QR
C Updated PCB layout for LOM 2011-05-10 QR
B Redo PCB layout of new design 2011-02-24 QR
A CREATED 2010-08-13 QR
REV CHANGES DATE INIT
DATE NAME
DRWN 2011-02-11 BLITGENA
CHKD
APPR
FILE : IO
MUSIC GROUP
P0AAQ
16-MCU
IO
BEHRINGER
SHEET 1 of 2

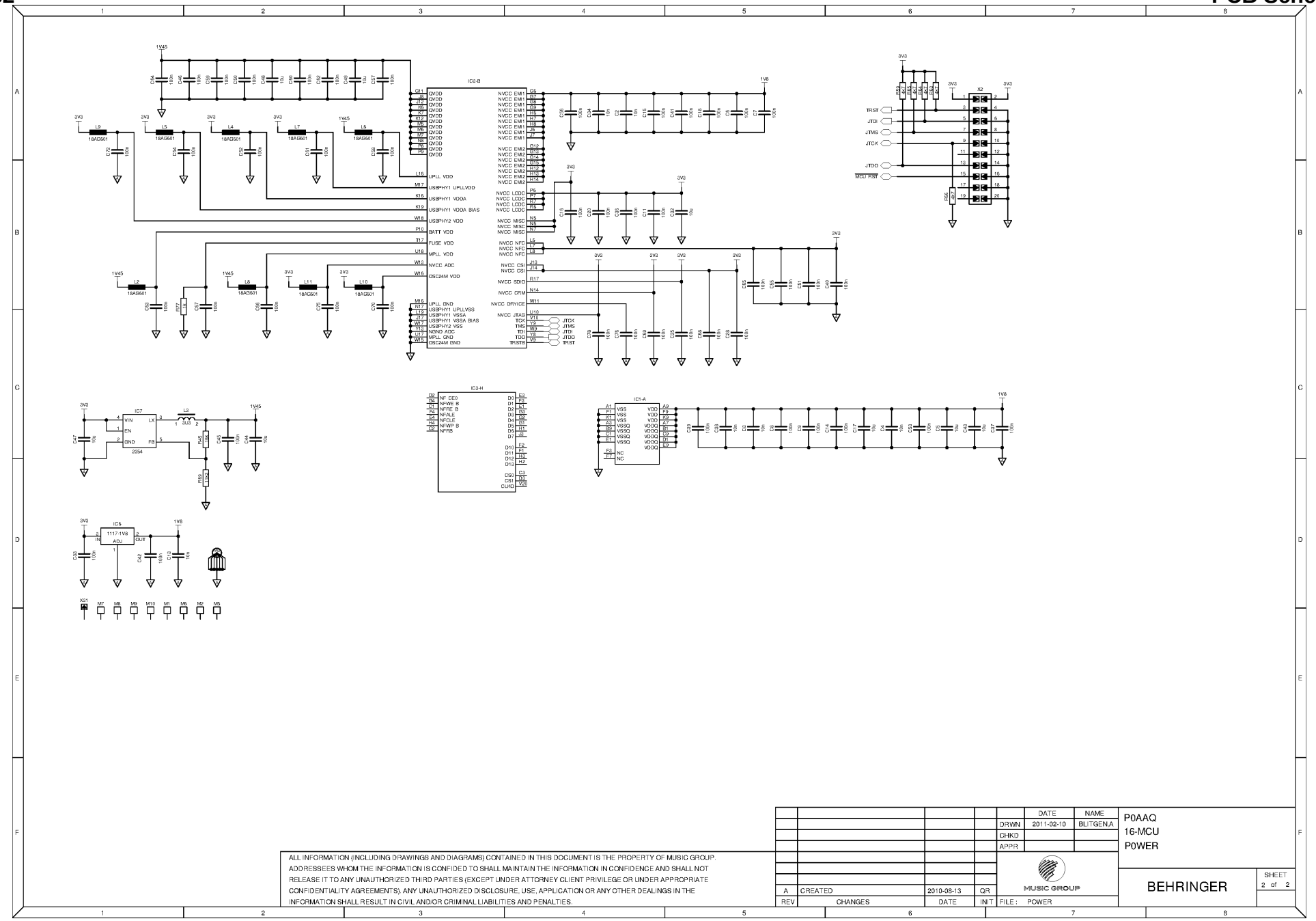

ALL INFORMATION (INCLUDING DRAWINGS AND DIAGRAMS) CONTAINED IN THIS DOCUMENT IS THE PROPERTY OF MUSIC GROUP. ADDRESSEES WHOM THE INFORMATION IS CONFIDED TO SHALL MAINTAIN THE INFORMATION IN CONFIDENCE AND SHALL NOT RELEASE IT TO ANY UNAUTHORIZED THIRD PARTIES (EXCEPT UNDER ATTORNEY CLIENT PRIVILEGE OR UNDER APPROPRIATE CONFIDENTIALITY AGREEMENTS). ANY UNAUTHORIZED DISCLOSURE, USE, APPLICATION OR ANY OTHER DEALINGS IN THE INFORMATION SHALL RESULT IN CIVIL AND/OR CRIMINAL LIABILITIES AND PENALTIES.

REV	CHANGES	DATE	INIT
A	CREATED	2010-08-13	QR

	DATE	NAME
DRWN	2011-02-10	BLITGEN.A
CHKD		
APPR		

MUSIC GROUP

FILE : POWER

P0AAQ
16-MCU
P0WER

BEHRINGER

SHEET 2 of 2

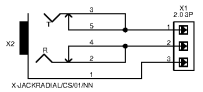

					DATE	NAME
				DRWN	2011-06-30	LY
				CHKD		
				APPR		

P0AAQ
PHONEJACK

ALL INFORMATION(INCLUDING DRAWINGS AND DIAGRAMS)CONTAINED IN THIS DOCUMENT IS THE PRORERTY OF BEHRINGER
ADDRESSEES WHOM THE INFORMATION IS CONFIDED TO SHALL MAINTA IN THE INFRMATION IN CONFIDENCE AND SHALL NOT
RELEASE IT TO ANY UNAUTHORIZED THIRD PARTIES(EXCEPT UNDER ATTORNEY CLIENT PRIVILE OR UNDER APPROPRIATE
CONFIDENTIALITY AGREEMENTS).ANY UNAUTHORIZED DISCLOSURE,USE,APPLICATION OR ANY OTHER DEALINGS IN THE
INFORMATION SHALL RESULT IN CIVIL AND/OR(WHERE APPLICABLE)CRIMINAL LIABILITIES AND PENALTIES

REV	CHANGES	DATE	INIT
	CREATED	2011-06-30	LY

behringer

FILE : 17-PHONEJACK RevA.sch

SHEET 1 of 1

P1

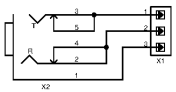

	DATE	NAME	
DRWN	2011-06-30	LY	P0AAQ
CHKD			17 PHONEJACK
APPR			PHONES

MUSIC GROUP

BEHRINGER

SHEET 1 of 1

FILE : PHONEJACK

REV	CHANGES	DATE	INIT
A	CREATED	2011-06-30	LY

ALL INFORMATION (INCLUDING DRAWINGS AND DIAGRAMS) CONTAINED IN THIS DOCUMENT IS THE PROPERTY OF MUSIC GROUP. ADDRESSEES WHOM THE INFORMATION IS CONFIDED TO SHALL MAINTAIN THE INFORMATION IN CONFIDENCE AND SHALL NOT RELEASE IT TO ANY UNAUTHORIZED THIRD PARTIES (EXCEPT UNDER ATTORNEY CLIENT PRIVILEGE OR UNDER APPROPRIATE CONFIDENTIALITY AGREEMENTS). ANY UNAUTHORIZED DISCLOSURE, USE, APPLICATION OR ANY OTHER DEALINGS IN THE INFORMATION SHALL RESULT IN CIVIL AND/OR CRIMINAL LIABILITIES AND PENALTIES.

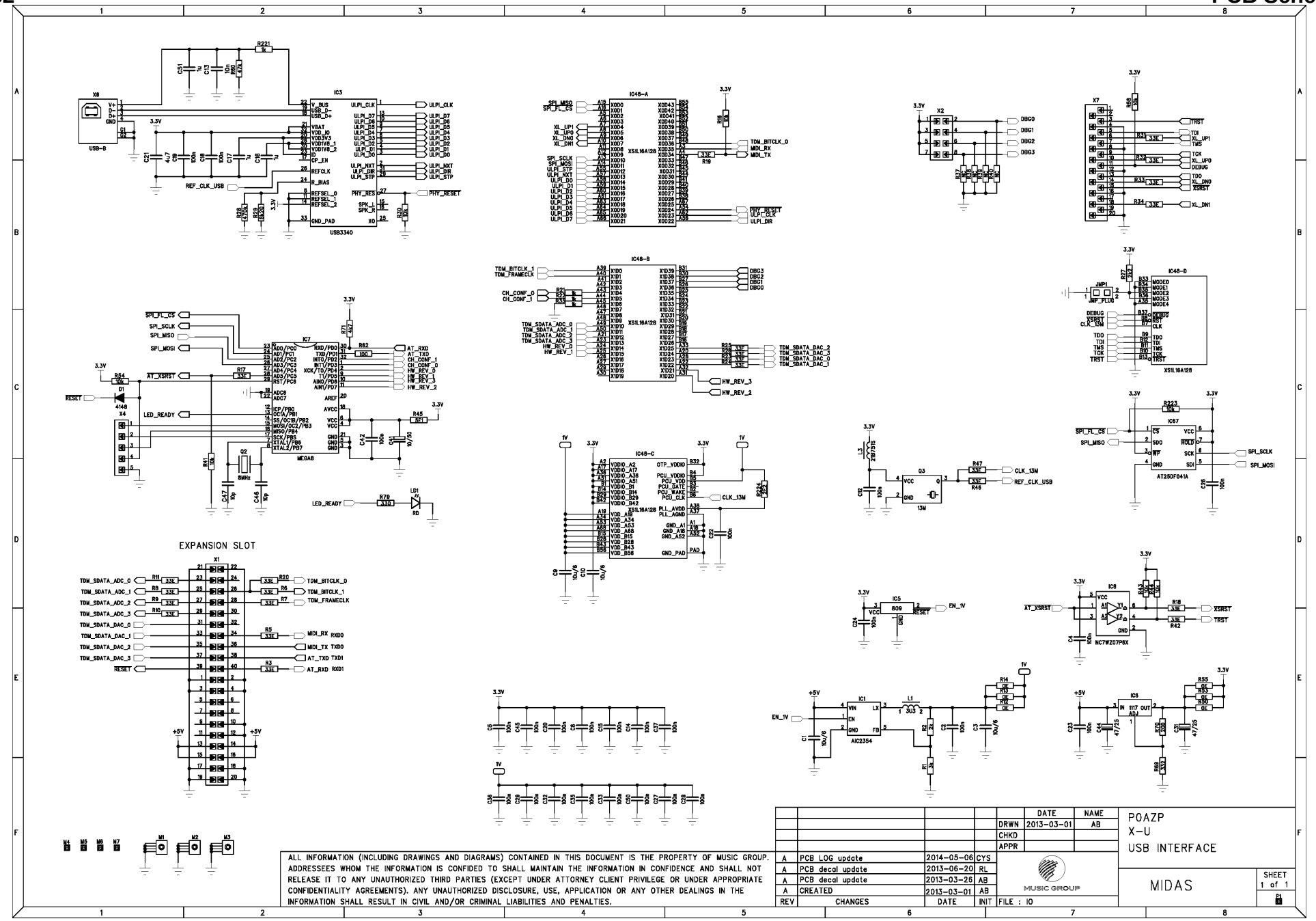
USB-B
USB3340
XS1L16A128
MEGA8
AT25DF041A
NC7WZ07P6X
AIC2354
EXPANSION SLOT
ALL INFORMATION (INCLUDING DRAWINGS AND DIAGRAMS) CONTAINED IN THIS DOCUMENT IS THE PROPERTY OF MUSIC GROUP. ADDRESSEES WHOM THE INFORMATION IS CONFIDED TO SHALL MAINTAIN THE INFORMATION IN CONFIDENCE AND SHALL NOT RELEASE IT TO ANY UNAUTHORIZED THIRD PARTIES (EXCEPT UNDER ATTORNEY CLIENT PRIVILEGE OR UNDER APPROPRIATE CONFIDENTIALITY AGREEMENTS). ANY UNAUTHORIZED DISCLOSURE, USE, APPLICATION OR ANY OTHER DEALINGS IN THE INFORMATION SHALL RESULT IN CIVIL AND/OR CRIMINAL LIABILITIES AND PENALTIES.
REV CHANGES DATE INIT
A PCB LOG update 2014-05-06 CYS
A PCB decal update 2013-06-20 RL
A PCB decal update 2013-03-26 AB
A CREATED 2013-03-01 AB
DATE NAME
DRWN 2013-03-01 AB
CHKD
APPR
POAZP
X-U
USB INTERFACE
MUSIC GROUP
MIDAS
SHEET 1 of 1
FILE : IO

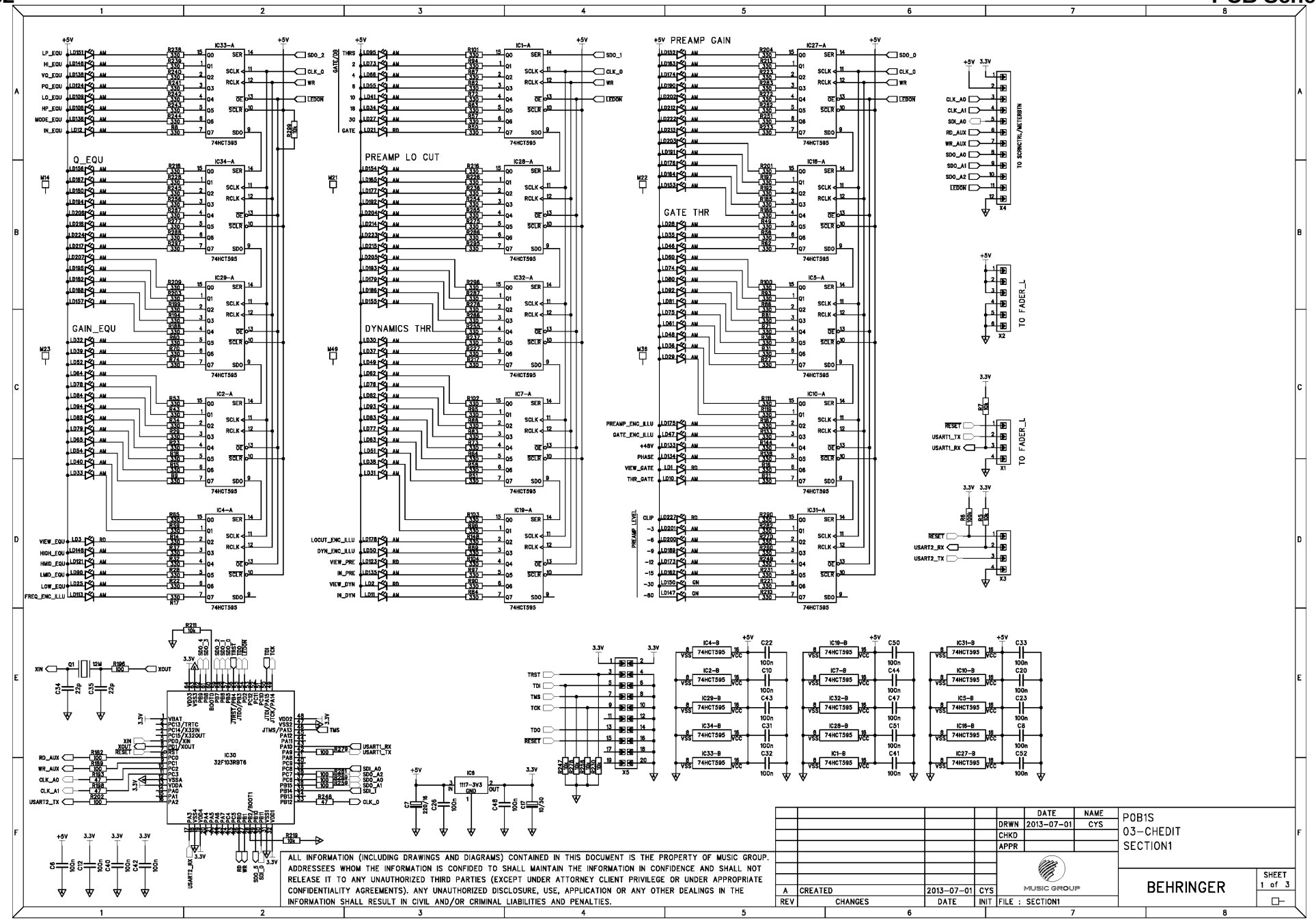
Q_EQU
GAIN_EQU
PREAMP LO CUT
DYNAMICS THR
PREAMP GAIN
GATE THR
TO SCRNCTRL/METERBTN
TO FADER_L
TO FADER_L
ALL INFORMATION (INCLUDING DRAWINGS AND DIAGRAMS) CONTAINED IN THIS DOCUMENT IS THE PROPERTY OF MUSIC GROUP. ADDRESSEES WHOM THE INFORMATION IS CONFIDED TO SHALL MAINTAIN THE INFORMATION IN CONFIDENCE AND SHALL NOT RELEASE IT TO ANY UNAUTHORIZED THIRD PARTIES (EXCEPT UNDER ATTORNEY CLIENT PRIVILEGE OR UNDER APPROPRIATE CONFIDENTIALITY AGREEMENTS). ANY UNAUTHORIZED DISCLOSURE, USE, APPLICATION OR ANY OTHER DEALINGS IN THE INFORMATION SHALL RESULT IN CIVIL AND/OR CRIMINAL LIABILITIES AND PENALTIES.
DATE NAME
DRWN 2013-07-01 CYS
CHKD
APPR
POB1S
03-CHEDIT
SECTION1
MUSIC GROUP
BEHRINGER
SHEET 1 of 3
A CREATED 2013-07-01 CYS
REV CHANGES DATE INIT
FILE : SECTION1

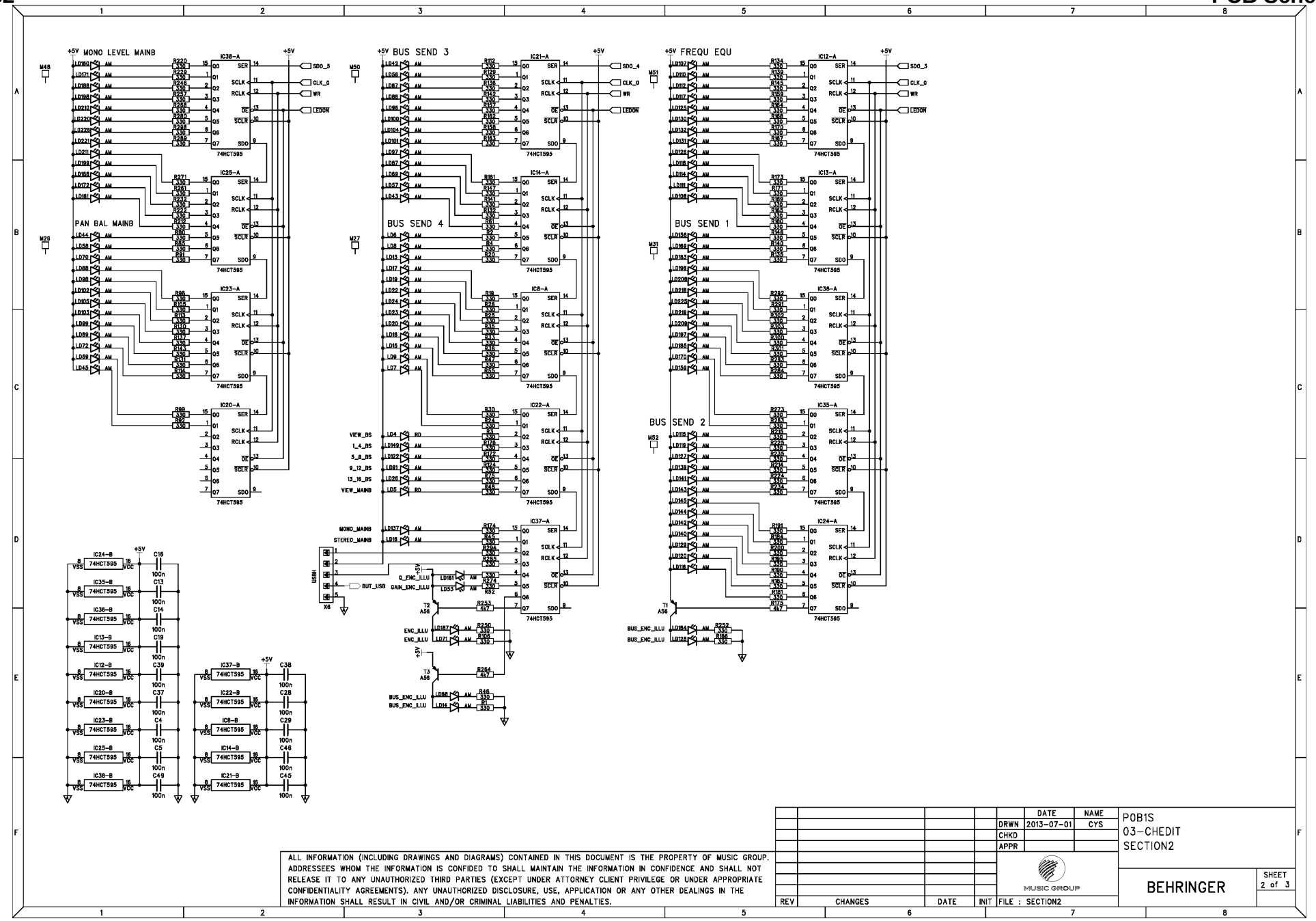

ALL INFORMATION (INCLUDING DRAWINGS AND DIAGRAMS) CONTAINED IN THIS DOCUMENT IS THE PROPERTY OF MUSIC GROUP. ADDRESSEES WHOM THE INFORMATION IS CONFIDED TO SHALL MAINTAIN THE INFORMATION IN CONFIDENCE AND SHALL NOT RELEASE IT TO ANY UNAUTHORIZED THIRD PARTIES (EXCEPT UNDER ATTORNEY CLIENT PRIVILEGE OR UNDER APPROPRIATE CONFIDENTIALITY AGREEMENTS). ANY UNAUTHORIZED DISCLOSURE, USE, APPLICATION OR ANY OTHER DEALINGS IN THE INFORMATION SHALL RESULT IN CIVIL AND/OR CRIMINAL LIABILITIES AND PENALTIES.

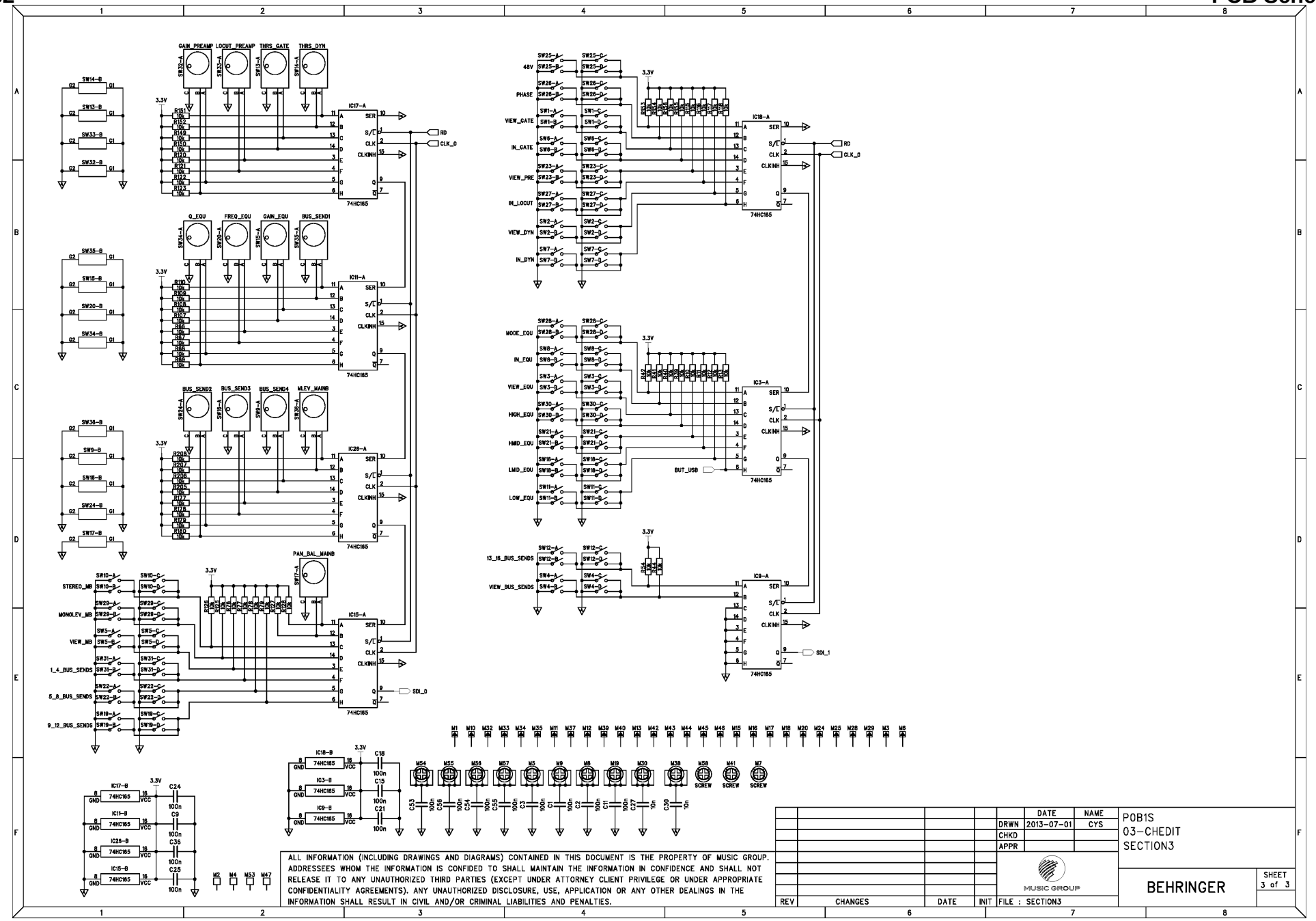
GAIN_PREAMP
LOCUT_PREAMP
THRS_GATE
THRS_DYN
Q_EQU
FREQ_EQU
GAIN_EQU
BUS_SEND1
BUS_SEND2
BUS_SEND3
BUS_SEND4
MLEV_MAINB
PAN_BAL_MAINB
48V
PHASE
VIEW_GATE
IN_GATE
VIEW_PRE
IN_LOCUT
VIEW_DYN
IN_DYN
MODE_EQU
IN_EQU
VIEW_EQU
HIGH_EQU
HMID_EQU
LMID_EQU
LOW_EQU
13_16_BUS_SENDS
VIEW_BUS_SENDS
STEREO_MB
MONOLEV_MB
VIEW_MB
1_4_BUS_SENDS
5_8_BUS_SENDS
9_12_BUS_SENDS
3.3V
74HC165
RD
CLK_0
SDI_0
SDI_1
BUT_USB
SCREW
ALL INFORMATION (INCLUDING DRAWINGS AND DIAGRAMS) CONTAINED IN THIS DOCUMENT IS THE PROPERTY OF MUSIC GROUP. ADDRESSEES WHOM THE INFORMATION IS CONFIDED TO SHALL MAINTAIN THE INFORMATION IN CONFIDENCE AND SHALL NOT RELEASE IT TO ANY UNAUTHORIZED THIRD PARTIES (EXCEPT UNDER ATTORNEY CLIENT PRIVILEGE OR UNDER APPROPRIATE CONFIDENTIALITY AGREEMENTS). ANY UNAUTHORIZED DISCLOSURE, USE, APPLICATION OR ANY OTHER DEALINGS IN THE INFORMATION SHALL RESULT IN CIVIL AND/OR CRIMINAL LIABILITIES AND PENALTIES.
REV
CHANGES
DATE
INIT
DATE
NAME
DRWN 2013-07-01 CYS
CHKD
APPR
MUSIC GROUP
FILE : SECTION3
P0B1S
03-CHEDIT
SECTION3
BEHRINGER
SHEET 3 of 3

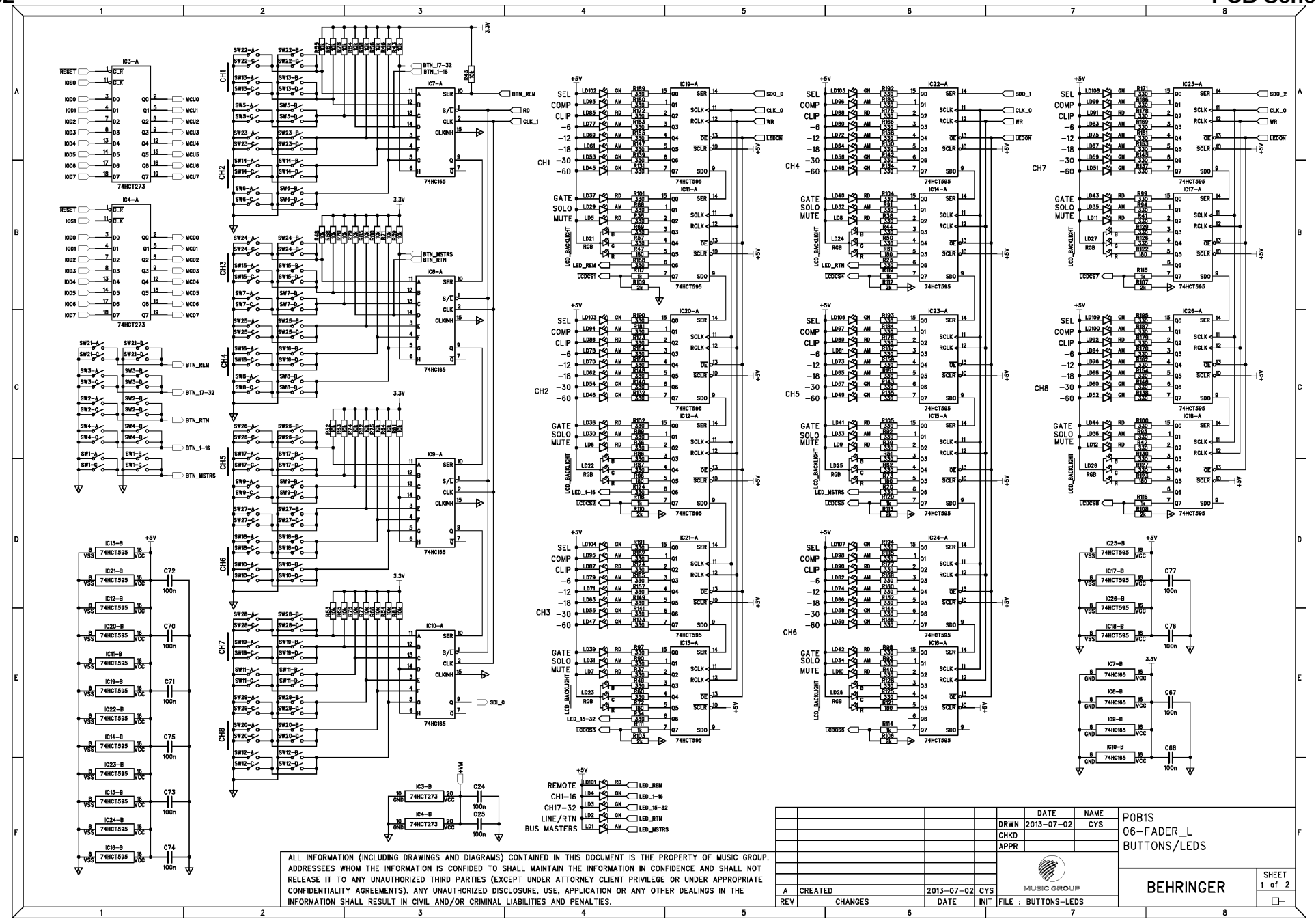
IC3-A
IC4-A
74HCT273
74HCT165
74HCT595
BTN_REM
BTN_17-32
BTN_RTN
BTN_1-16
BTN_MSTRS
SDI_0
SDO_0
SDO_1
SDO_2
CLK_0
CLK_1
WR
RD
LEDON
REMOTE
CH1-16
CH17-32
LINE/RTN
BUS MASTERS
LED_REM
LED_1-16
LED_15-32
LED_RTN
LED_MSTRS
LCD_BACKLIGHT
MUSIC GROUP
BEHRINGER
POB1S
06-FADER_L
BUTTONS/LEDS
DATE
NAME
DRWN
2013-07-02
CYS
CHKD
APPR
A
CREATED
2013-07-02
CYS
REV
CHANGES
DATE
INIT
FILE : BUTTONS-LEDS
SHEET
1 of 2
ALL INFORMATION (INCLUDING DRAWINGS AND DIAGRAMS) CONTAINED IN THIS DOCUMENT IS THE PROPERTY OF MUSIC GROUP. ADDRESSEES WHOM THE INFORMATION IS CONFIDED TO SHALL MAINTAIN THE INFORMATION IN CONFIDENCE AND SHALL NOT RELEASE IT TO ANY UNAUTHORIZED THIRD PARTIES (EXCEPT UNDER ATTORNEY CLIENT PRIVILEGE OR UNDER APPROPRIATE CONFIDENTIALITY AGREEMENTS). ANY UNAUTHORIZED DISCLOSURE, USE, APPLICATION OR ANY OTHER DEALINGS IN THE INFORMATION SHALL RESULT IN CIVIL AND/OR CRIMINAL LIABILITIES AND PENALTIES.

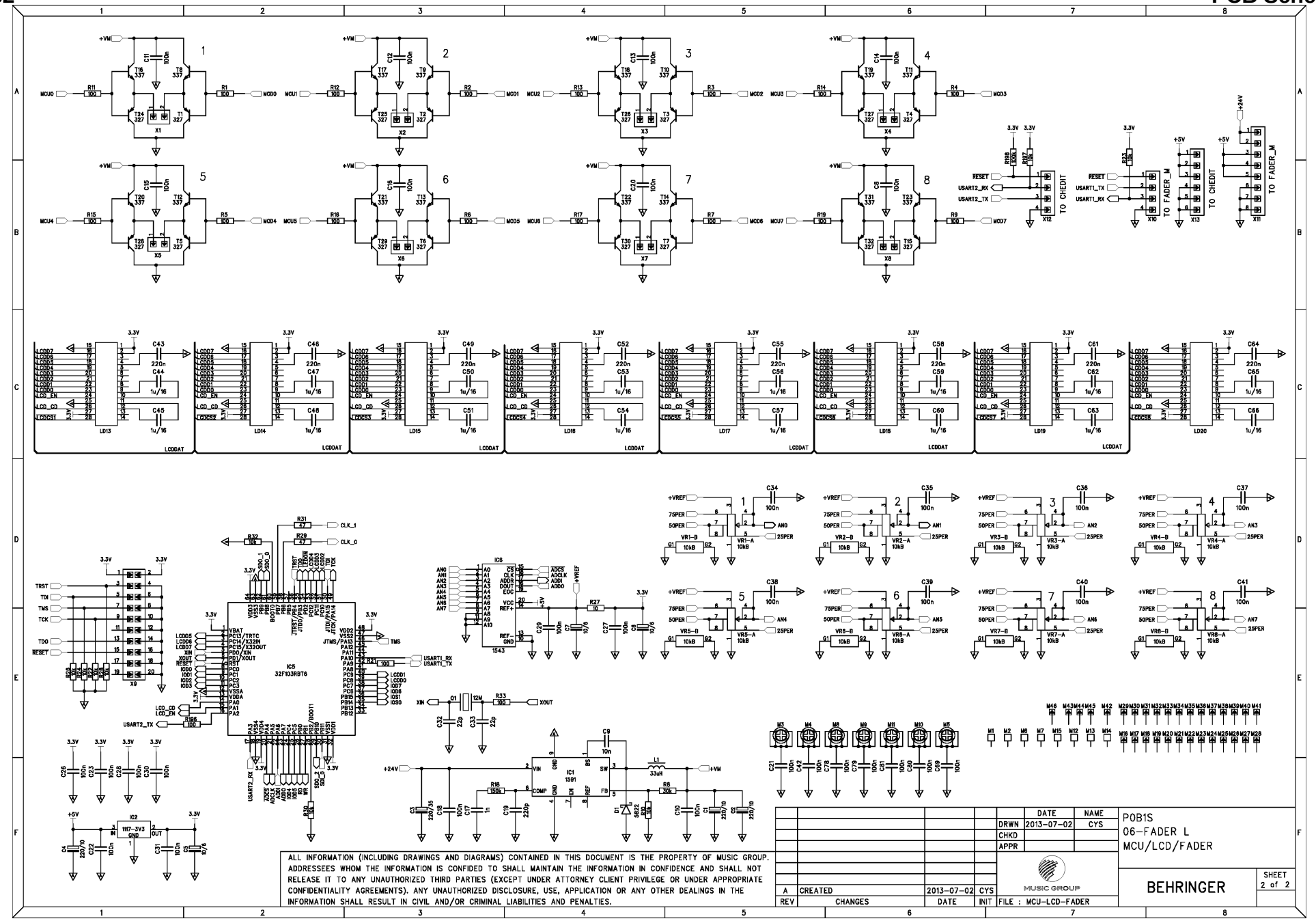
TO CHEDIT
TO FADER_M
IC5
32F103RBT6
IC1
1591
IC2
1117-3V3
ALL INFORMATION (INCLUDING DRAWINGS AND DIAGRAMS) CONTAINED IN THIS DOCUMENT IS THE PROPERTY OF MUSIC GROUP. ADDRESSEES WHOM THE INFORMATION IS CONFIDED TO SHALL MAINTAIN THE INFORMATION IN CONFIDENCE AND SHALL NOT RELEASE IT TO ANY UNAUTHORIZED THIRD PARTIES (EXCEPT UNDER ATTORNEY CLIENT PRIVILEGE OR UNDER APPROPRIATE CONFIDENTIALITY AGREEMENTS). ANY UNAUTHORIZED DISCLOSURE, USE, APPLICATION OR ANY OTHER DEALINGS IN THE INFORMATION SHALL RESULT IN CIVIL AND/OR CRIMINAL LIABILITIES AND PENALTIES.
DATE NAME
DRWN 2013-07-02 CYS
CHKD
APPR
P0B1S
06-FADER L
MCU/LCD/FADER
MUSIC GROUP
BEHRINGER
SHEET 2 of 2
A CREATED 2013-07-02 CYS
REV CHANGES DATE INIT
FILE : MCU-LCD-FADER

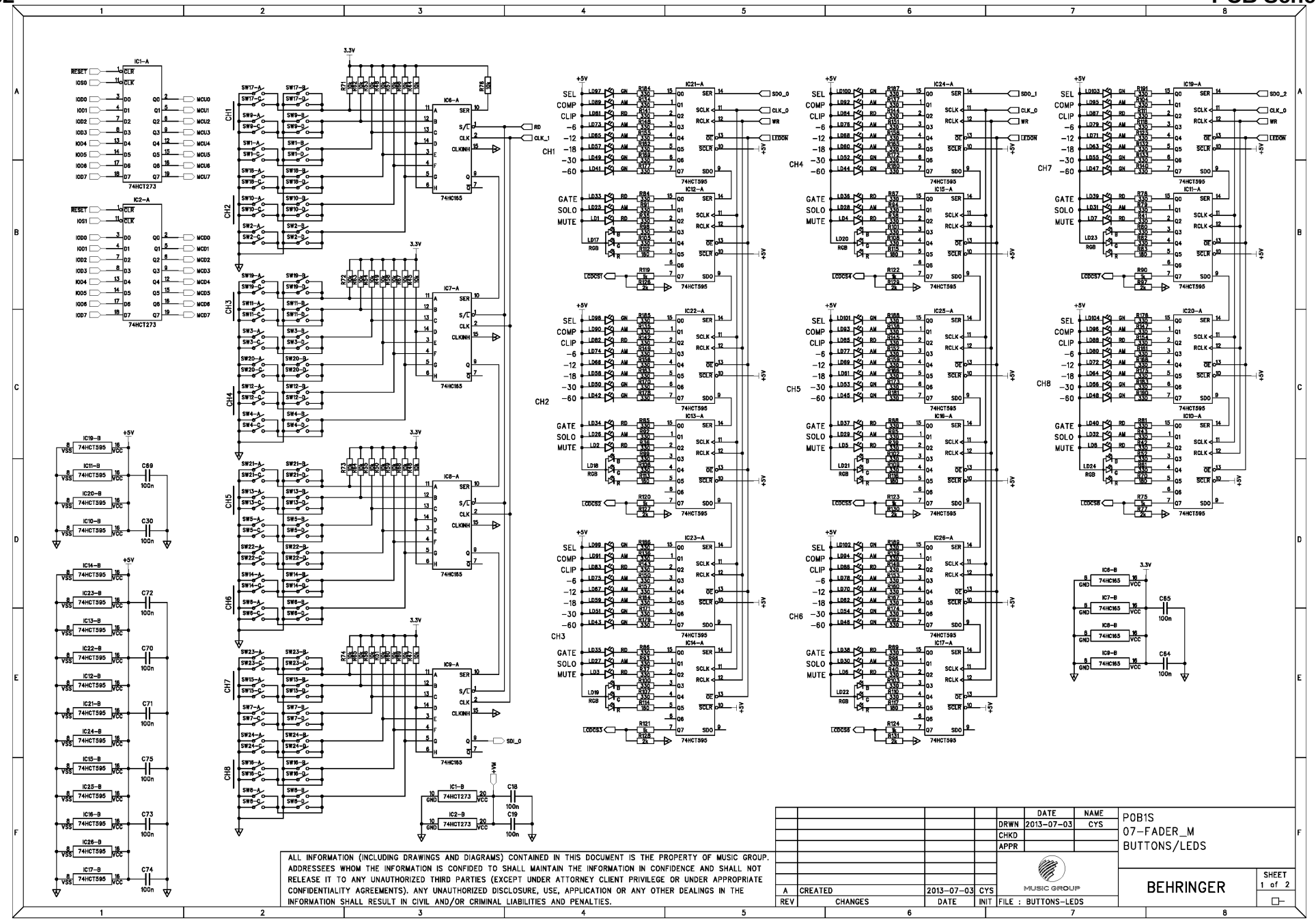
IC1-A
IC2-A
74HCT273
74HC165
74HCT595
CH1
CH2
CH3
CH4
CH5
CH6
CH7
CH8
SEL
COMP
CLIP
GATE
SOLO
MUTE
RD
CLK_1
SDI_0
SDO_0
CLK_0
WR
LEDON
SDO_1
SDO_2
3.3V
+5V
ALL INFORMATION (INCLUDING DRAWINGS AND DIAGRAMS) CONTAINED IN THIS DOCUMENT IS THE PROPERTY OF MUSIC GROUP. ADDRESSEES WHOM THE INFORMATION IS CONFIDED TO SHALL MAINTAIN THE INFORMATION IN CONFIDENCE AND SHALL NOT RELEASE IT TO ANY UNAUTHORIZED THIRD PARTIES (EXCEPT UNDER ATTORNEY CLIENT PRIVILEGE OR UNDER APPROPRIATE CONFIDENTIALITY AGREEMENTS). ANY UNAUTHORIZED DISCLOSURE, USE, APPLICATION OR ANY OTHER DEALINGS IN THE INFORMATION SHALL RESULT IN CIVIL AND/OR CRIMINAL LIABILITIES AND PENALTIES.
DATE
NAME
DRWN 2013-07-03 CYS
CHKD
APPR
POB1S
07-FADER_M
BUTTONS/LEDS
A CREATED 2013-07-03 CYS
REV CHANGES DATE INIT
FILE : BUTTONS-LEDS
MUSIC GROUP
BEHRINGER
SHEET 1 of 2

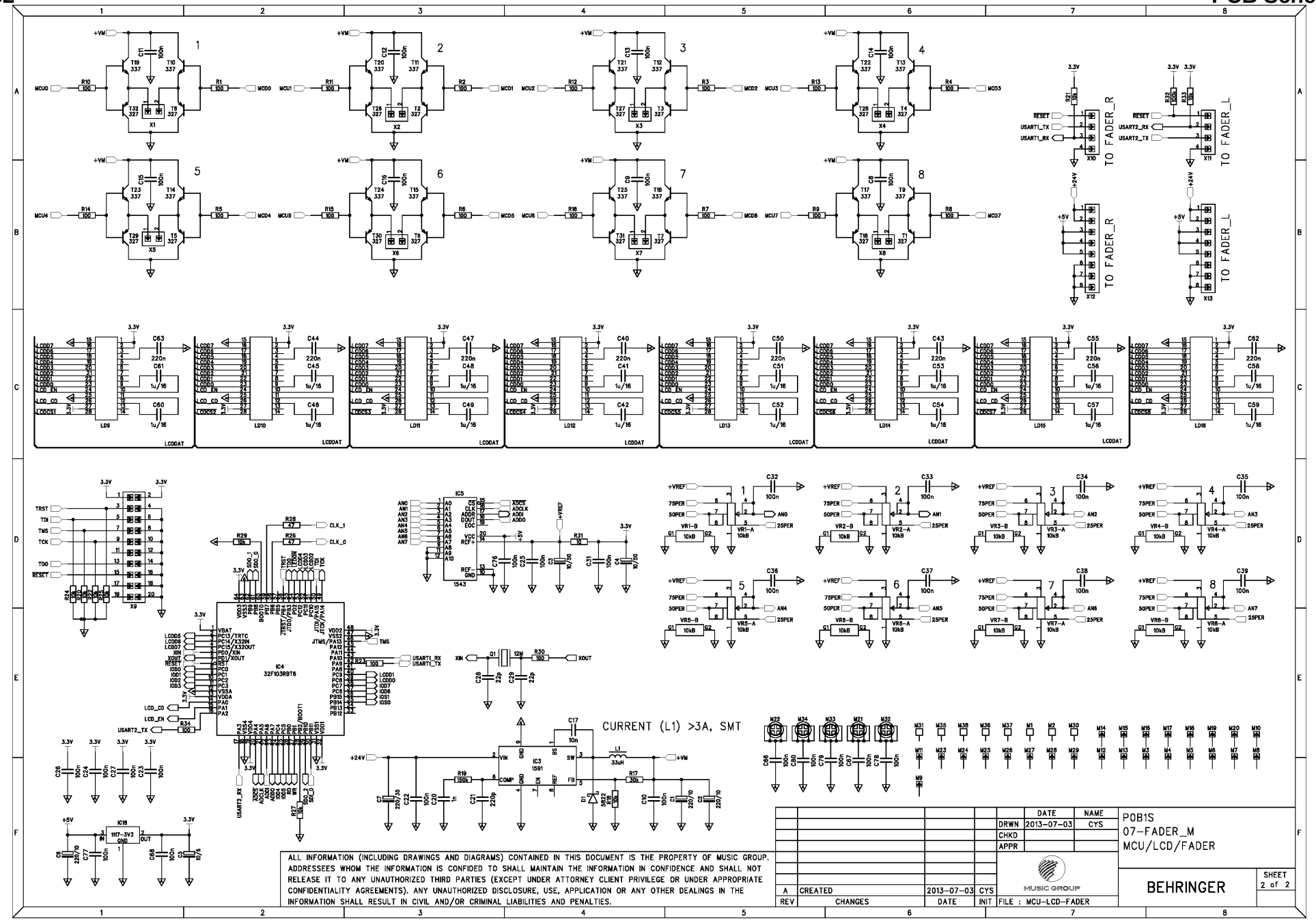

ALL INFORMATION (INCLUDING DRAWINGS AND DIAGRAMS) CONTAINED IN THIS DOCUMENT IS THE PROPERTY OF MUSIC GROUP. ADDRESSEES WHOM THE INFORMATION IS CONFIDED TO SHALL MAINTAIN THE INFORMATION IN CONFIDENCE AND SHALL NOT RELEASE IT TO ANY UNAUTHORIZED THIRD PARTIES (EXCEPT UNDER ATTORNEY CLIENT PRIVILEGE OR UNDER APPROPRIATE CONFIDENTIALITY AGREEMENTS). ANY UNAUTHORIZED DISCLOSURE, USE, APPLICATION OR ANY OTHER DEALINGS IN THE INFORMATION SHALL RESULT IN CIVIL AND/OR CRIMINAL LIABILITIES AND PENALTIES.

REV	CHANGES	DATE	INIT
A	CREATED	2013-07-03	CYS

	DATE	NAME
DRWN	2013-07-03	CYS
CHKD		
APPR		

MUSIC GROUP

FILE : MCU-LCD-FADER

P0B1S
07-FADER_M
MCU/LCD/FADER

BEHRINGER

SHEET 2 of 2

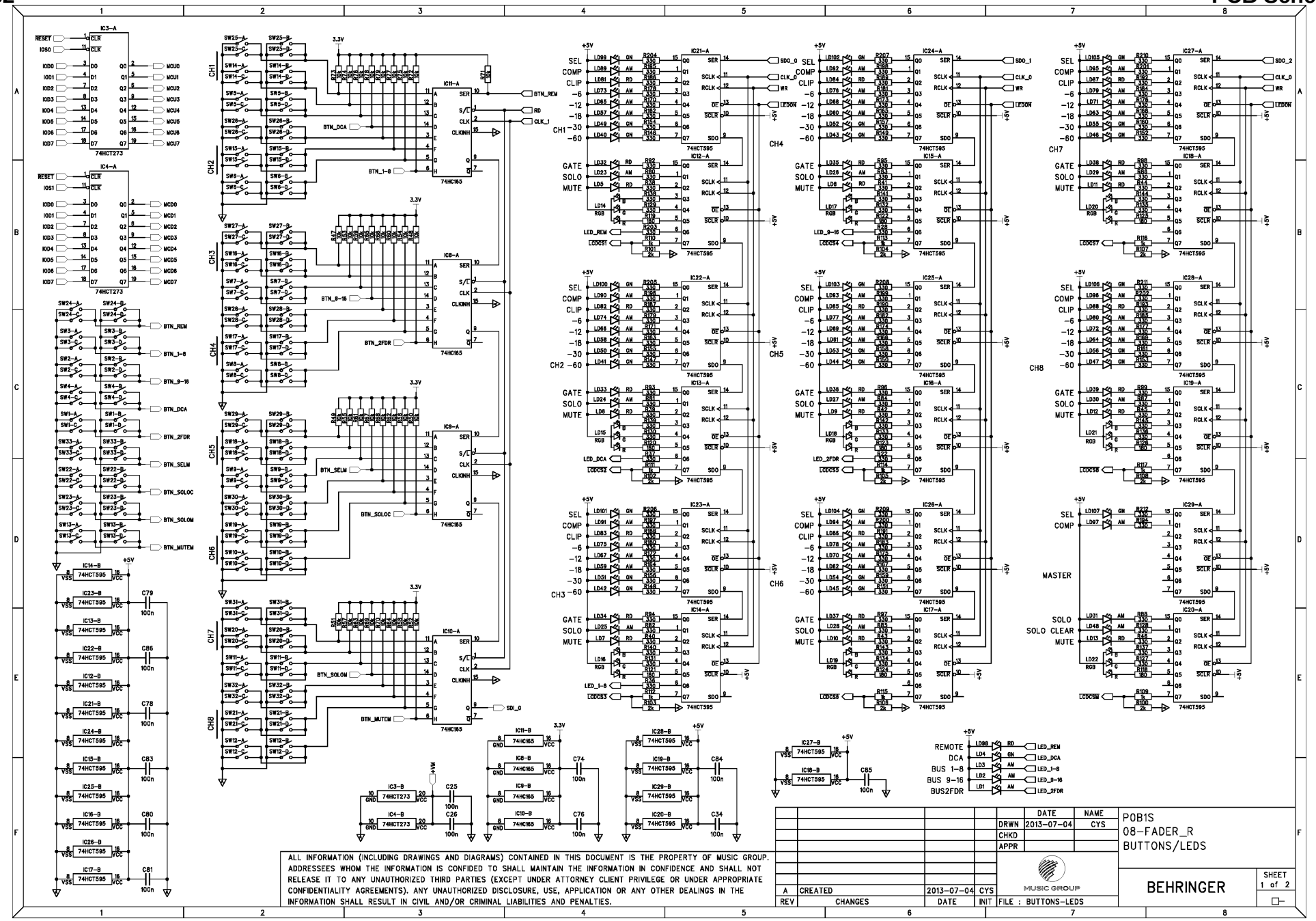

ALL INFORMATION (INCLUDING DRAWINGS AND DIAGRAMS) CONTAINED IN THIS DOCUMENT IS THE PROPERTY OF MUSIC GROUP. ADDRESSEES WHOM THE INFORMATION IS CONFIDED TO SHALL MAINTAIN THE INFORMATION IN CONFIDENCE AND SHALL NOT RELEASE IT TO ANY UNAUTHORIZED THIRD PARTIES (EXCEPT UNDER ATTORNEY CLIENT PRIVILEGE OR UNDER APPROPRIATE CONFIDENTIALITY AGREEMENTS). ANY UNAUTHORIZED DISCLOSURE, USE, APPLICATION OR ANY OTHER DEALINGS IN THE INFORMATION SHALL RESULT IN CIVIL AND/OR CRIMINAL LIABILITIES AND PENALTIES.

REV	CHANGES	DATE	INIT
A	CREATED	2013-07-04	CYS

	DATE	NAME
DRWN	2013-07-04	CYS
CHKD		
APPR		

MUSIC GROUP

FILE : BUTTONS-LEDS

POB1S
08-FADER_R
BUTTONS/LEDS

BEHRINGER

SHEET 1 of 2

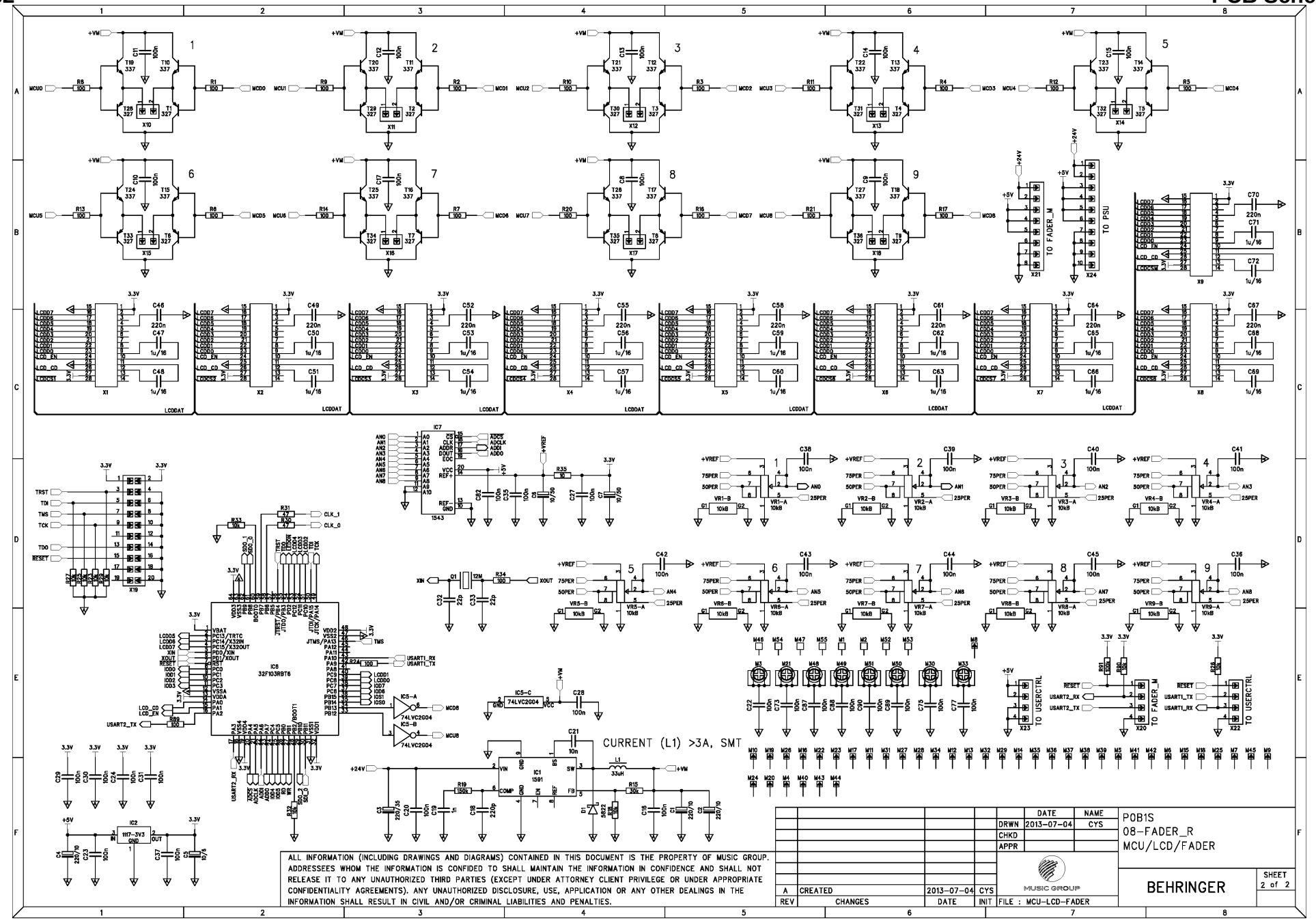
CURRENT (L1) >3A, SMT
TO FADER_M
TO PSU
TO USERCTRL
IC6
32F103RBT6
IC7
1543
IC1
1591
IC2
1117-3V3
IC5-A
IC5-B
IC5-C
74LVC2G04
LCDDAT
ALL INFORMATION (INCLUDING DRAWINGS AND DIAGRAMS) CONTAINED IN THIS DOCUMENT IS THE PROPERTY OF MUSIC GROUP. ADDRESSEES WHOM THE INFORMATION IS CONFIDED TO SHALL MAINTAIN THE INFORMATION IN CONFIDENCE AND SHALL NOT RELEASE IT TO ANY UNAUTHORIZED THIRD PARTIES (EXCEPT UNDER ATTORNEY CLIENT PRIVILEGE OR UNDER APPROPRIATE CONFIDENTIALITY AGREEMENTS). ANY UNAUTHORIZED DISCLOSURE, USE, APPLICATION OR ANY OTHER DEALINGS IN THE INFORMATION SHALL RESULT IN CIVIL AND/OR CRIMINAL LIABILITIES AND PENALTIES.
DATE
NAME
DRWN 2013-07-04 CYS
CHKD
APPR
P0B1S
08-FADER_R
MCU/LCD/FADER
MUSIC GROUP
BEHRINGER
SHEET 2 of 2
A CREATED 2013-07-04 CYS
REV CHANGES DATE INIT
FILE : MCU-LCD-FADER

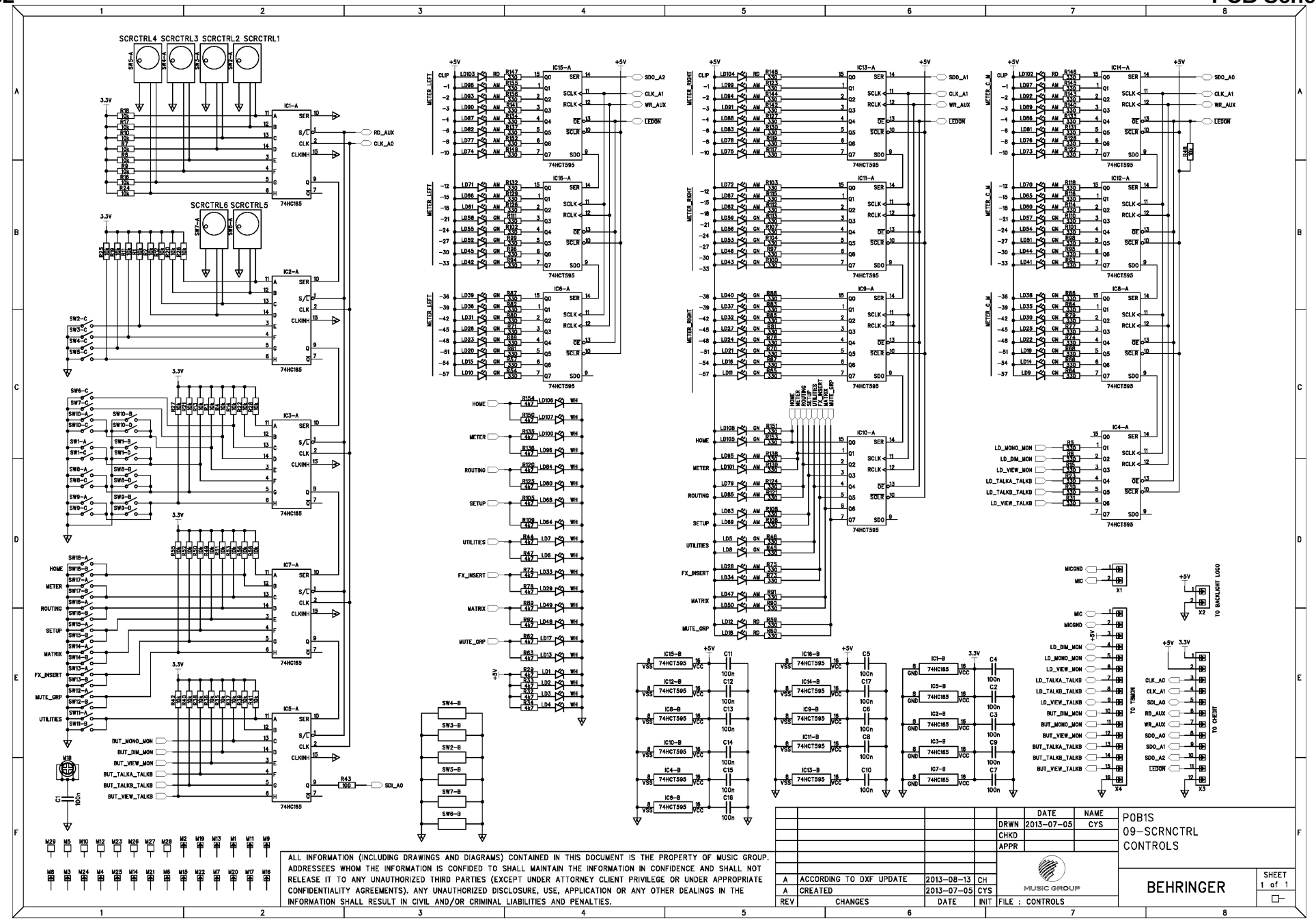
SCRCTRL4 SCRCTRL3 SCRCTRL2 SCRCTRL1
SCRCTRL6 SCRCTRL5
74HC165
74HCT595
RD_AUX
CLK_A0
SDO_A2
CLK_A1
WR_AUX
LEDON
SDO_A1
SDO_A0
SDI_A0
BUT_MONO_MON
BUT_DIM_MON
BUT_VIEW_MON
BUT_TALKA_TALKB
BUT_TALKB_TALKB
BUT_VIEW_TALKB
LD_MONO_MON
LD_DIM_MON
LD_VIEW_MON
LD_TALKA_TALKB
LD_TALKB_TALKB
LD_VIEW_TALKB
MICGND
MIC
TO BACKLIGHT LOGO
TO TRACK
TO CHEDIT
CLK_A0
CLK_A1
SDI_A0
RD_AUX
WR_AUX
SDO_A0
SDO_A1
SDO_A2
LEDON
HOME
METER
ROUTING
SETUP
UTILITIES
FX_INSERT
MATRIX
MUTE_GRP
ALL INFORMATION (INCLUDING DRAWINGS AND DIAGRAMS) CONTAINED IN THIS DOCUMENT IS THE PROPERTY OF MUSIC GROUP. ADDRESSEES WHOM THE INFORMATION IS CONFIDED TO SHALL MAINTAIN THE INFORMATION IN CONFIDENCE AND SHALL NOT RELEASE IT TO ANY UNAUTHORIZED THIRD PARTIES (EXCEPT UNDER ATTORNEY CLIENT PRIVILEGE OR UNDER APPROPRIATE CONFIDENTIALITY AGREEMENTS). ANY UNAUTHORIZED DISCLOSURE, USE, APPLICATION OR ANY OTHER DEALINGS IN THE INFORMATION SHALL RESULT IN CIVIL AND/OR CRIMINAL LIABILITIES AND PENALTIES.
REV CHANGES DATE INIT
A ACCORDING TO DXF UPDATE 2013-08-13 CH
A CREATED 2013-07-05 CYS
FILE : CONTROLS
DATE NAME
DRWN 2013-07-05 CYS
CHKD
APPR
MUSIC GROUP
POB1S
09-SCRNCTRL
CONTROLS
BEHRINGER
SHEET 1 of 1

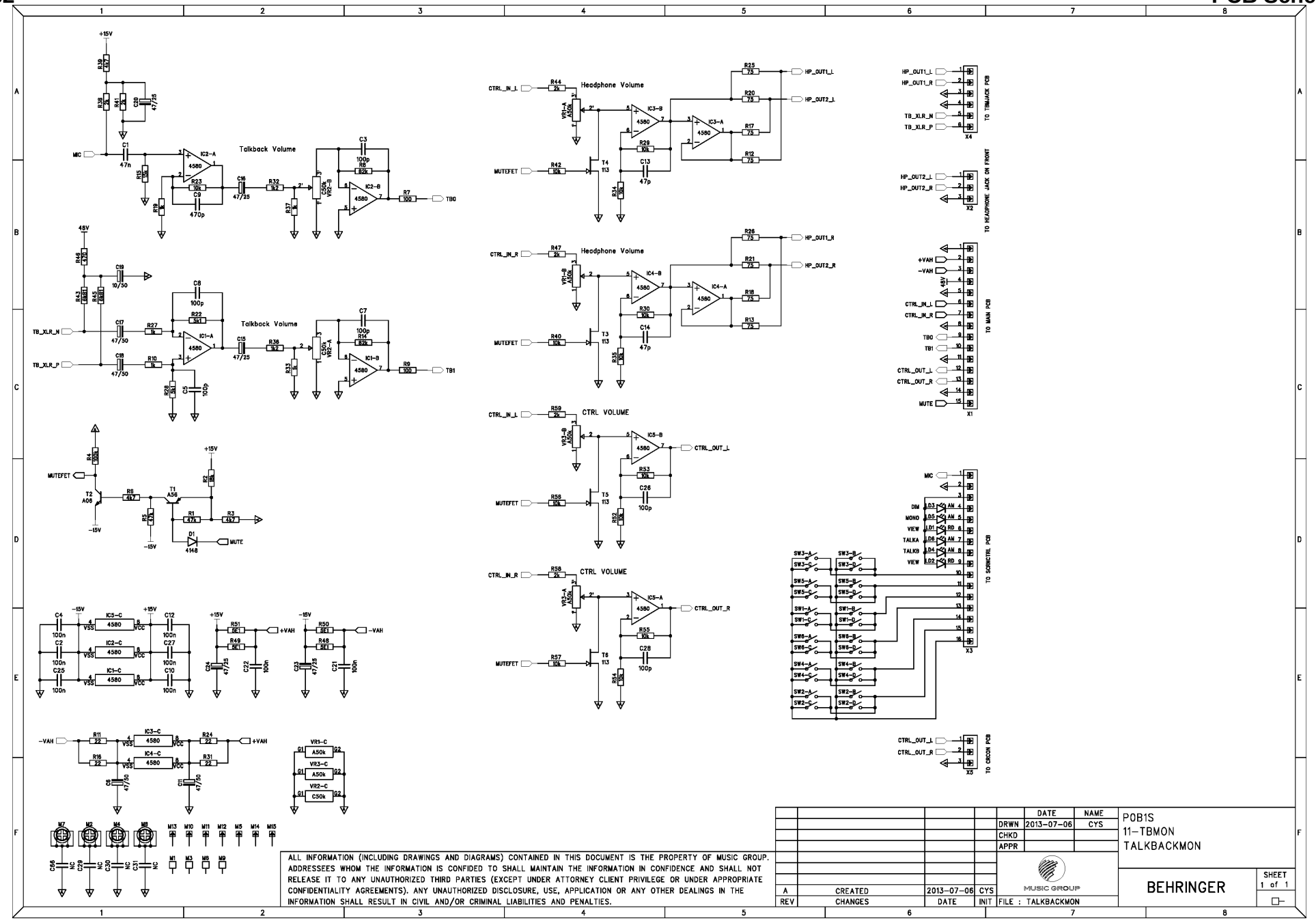
Talkback Volume
Headphone Volume
Headphone Volume
CTRL VOLUME
CTRL VOLUME
TO TBMJACK PCB
TO HEADPHONE JACK ON FRONT
TO MAIN PCB
TO SCONCTRL PCB
TO CRCON PCB
POB1S
11-TBMON
TALKBACKMON
BEHRINGER
SHEET 1 of 1
FILE : TALKBACKMON
ALL INFORMATION (INCLUDING DRAWINGS AND DIAGRAMS) CONTAINED IN THIS DOCUMENT IS THE PROPERTY OF MUSIC GROUP. ADDRESSEES WHOM THE INFORMATION IS CONFIDED TO SHALL MAINTAIN THE INFORMATION IN CONFIDENCE AND SHALL NOT RELEASE IT TO ANY UNAUTHORIZED THIRD PARTIES (EXCEPT UNDER ATTORNEY CLIENT PRIVILEGE OR UNDER APPROPRIATE CONFIDENTIALITY AGREEMENTS). ANY UNAUTHORIZED DISCLOSURE, USE, APPLICATION OR ANY OTHER DEALINGS IN THE INFORMATION SHALL RESULT IN CIVIL AND/OR CRIMINAL LIABILITIES AND PENALTIES.

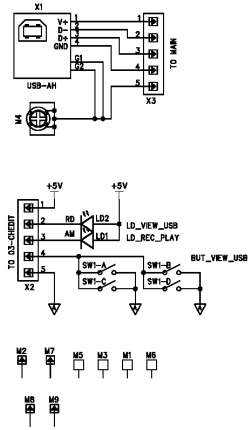

ALL INFORMATION (INCLUDING DRAWINGS AND DIAGRAMS) CONTAINED IN THIS DOCUMENT IS THE PROPERTY OF MUSIC GROUP. ADDRESSEES WHOM THE INFORMATION IS CONFIDED TO SHALL MAINTAIN THE INFORMATION IN CONFIDENCE AND SHALL NOT RELEASE IT TO ANY UNAUTHORIZED THIRD PARTIES (EXCEPT UNDER ATTORNEY CLIENT PRIVILEGE OR UNDER APPROPRIATE CONFIDENTIALITY AGREEMENTS). ANY UNAUTHORIZED DISCLOSURE, USE, APPLICATION OR ANY OTHER DEALINGS IN THE INFORMATION SHALL RESULT IN CIVIL AND/OR CRIMINAL LIABILITIES AND PENALTIES.

REV	CHANGES	DATE	INIT
A	CREATED	2013-07-07	CYS

	DATE	NAME
DRWN	2013-07-07	CYS
CHKD		
APPR		

MUSIC GROUP

FILE : USB

P0B1S
12-USBH
USB INPUT

BEHRINGER

SHEET 1 of 1

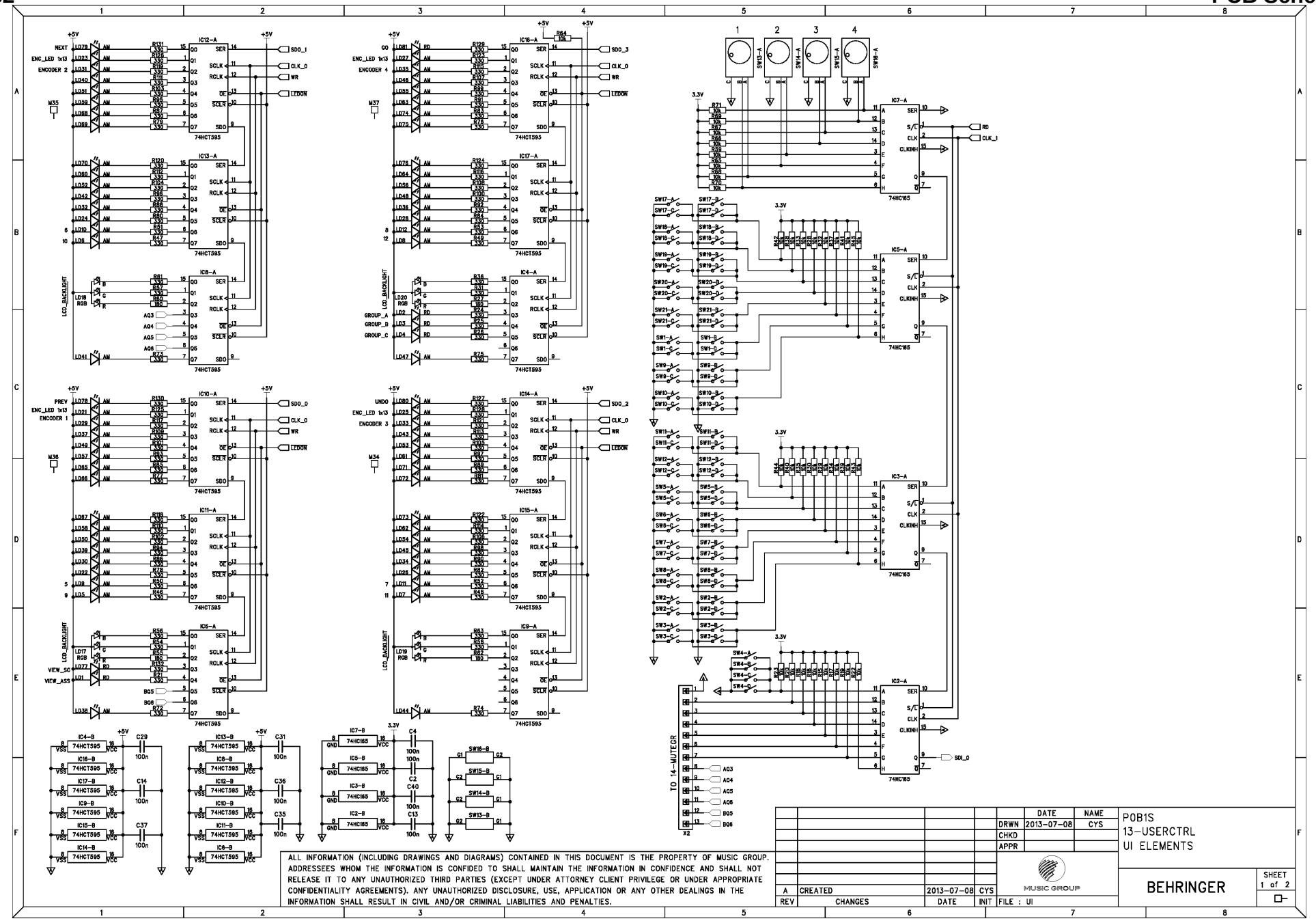
ALL INFORMATION (INCLUDING DRAWINGS AND DIAGRAMS) CONTAINED IN THIS DOCUMENT IS THE PROPERTY OF MUSIC GROUP. ADDRESSEES WHOM THE INFORMATION IS CONFIDED TO SHALL MAINTAIN THE INFORMATION IN CONFIDENCE AND SHALL NOT RELEASE IT TO ANY UNAUTHORIZED THIRD PARTIES (EXCEPT UNDER ATTORNEY CLIENT PRIVILEGE OR UNDER APPROPRIATE CONFIDENTIALITY AGREEMENTS). ANY UNAUTHORIZED DISCLOSURE, USE, APPLICATION OR ANY OTHER DEALINGS IN THE INFORMATION SHALL RESULT IN CIVIL AND/OR CRIMINAL LIABILITIES AND PENALTIES.
DATE NAME
DRWN 2013-07-08 CYS
CHKD
APPR
A CREATED 2013-07-08 CYS
REV CHANGES DATE INIT
FILE : UI
MUSIC GROUP
BEHRINGER
SHEET 1 of 2
P0B1S
13-USERCTRL
UI ELEMENTS
TO 14-MUTEGR
74HCT595
74HC165
74HC165

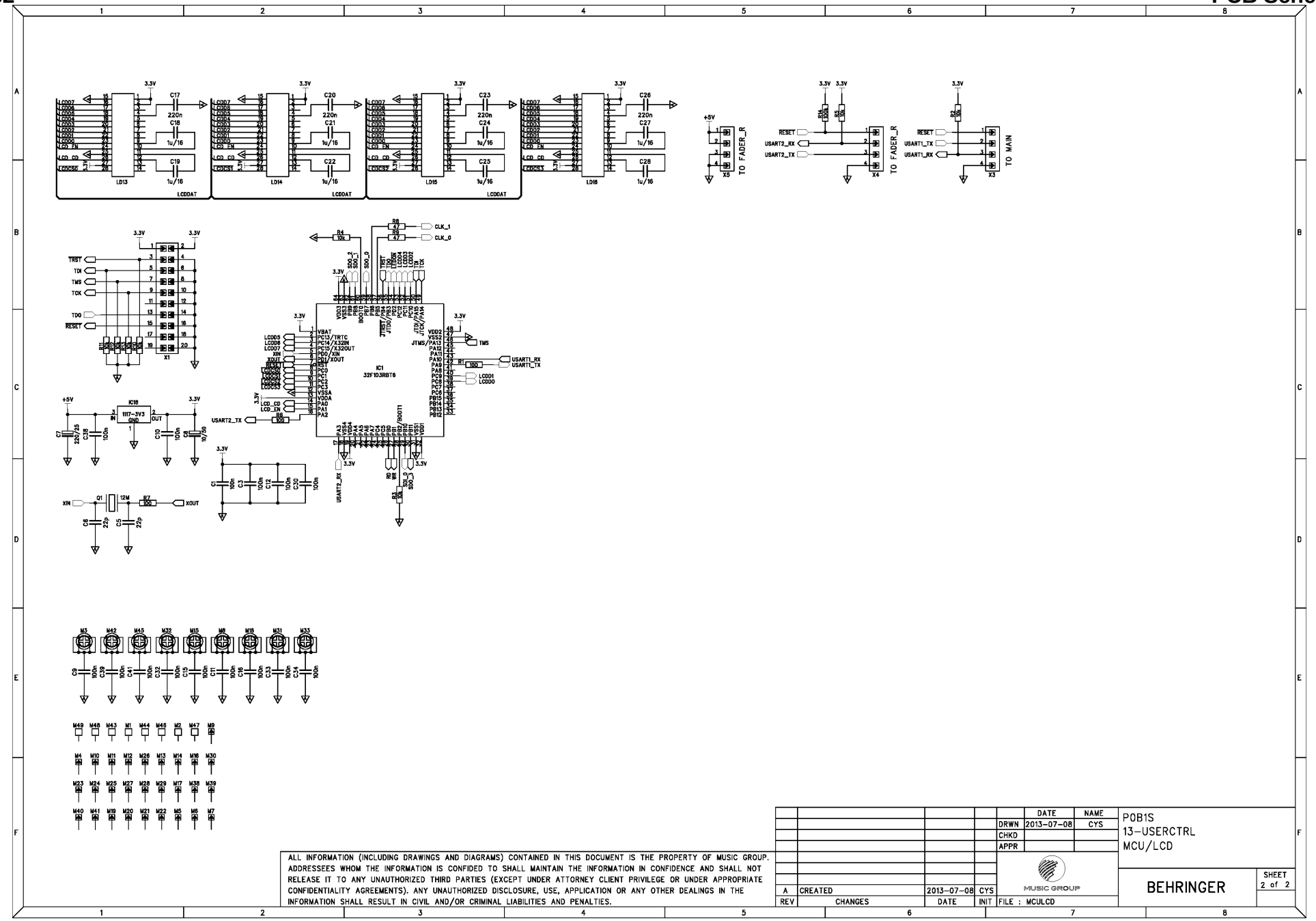
LD13
LD14
LD15
LD16
LCDDAT
TO FADER_R
TO MAIN
X1
X3
X4
X5
IC1
32F103RBT6
IC18
1117-3V3
XIN
XOUT
CLK_1
CLK_0
TMS
USART1_RX
USART1_TX
USART2_RX
USART2_TX
RESET
TRST
TDI
TCK
TDO
LCD_CD
LCD_EN
LCDD1
LCDD0
MUSIC GROUP
BEHRINGER
P0B1S
13-USERCTRL
MCU/LCD
DRWN 2013-07-08 CYS
CHKD
APPR
A CREATED 2013-07-08 CYS
REV CHANGES DATE INIT
FILE : MCULCD
SHEET 2 of 2
ALL INFORMATION (INCLUDING DRAWINGS AND DIAGRAMS) CONTAINED IN THIS DOCUMENT IS THE PROPERTY OF MUSIC GROUP. ADDRESSEES WHOM THE INFORMATION IS CONFIDED TO SHALL MAINTAIN THE INFORMATION IN CONFIDENCE AND SHALL NOT RELEASE IT TO ANY UNAUTHORIZED THIRD PARTIES (EXCEPT UNDER ATTORNEY CLIENT PRIVILEGE OR UNDER APPROPRIATE CONFIDENTIALITY AGREEMENTS). ANY UNAUTHORIZED DISCLOSURE, USE, APPLICATION OR ANY OTHER DEALINGS IN THE INFORMATION SHALL RESULT IN CIVIL AND/OR CRIMINAL LIABILITIES AND PENALTIES.

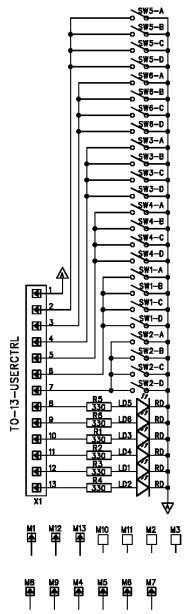

ALL INFORMATION (INCLUDING DRAWINGS AND DIAGRAMS) CONTAINED IN THIS DOCUMENT IS THE PROPERTY OF MUSIC GROUP. ADDRESSEES WHOM THE INFORMATION IS CONFIDED TO SHALL MAINTAIN THE INFORMATION IN CONFIDENCE AND SHALL NOT RELEASE IT TO ANY UNAUTHORIZED THIRD PARTIES (EXCEPT UNDER ATTORNEY CLIENT PRIVILEGE OR UNDER APPROPRIATE CONFIDENTIALITY AGREEMENTS). ANY UNAUTHORIZED DISCLOSURE, USE, APPLICATION OR ANY OTHER DEALINGS IN THE INFORMATION SHALL RESULT IN CIVIL AND/OR CRIMINAL LIABILITIES AND PENALTIES.

REV	CHANGES	DATE	INIT
A	CREATED	2013-07-09	CYS

	DATE	NAME
DRWN	2013-07-09	CYS
CHKD		
APPR		

MUSIC GROUP

FILE : MUTEGRP

P0B1S
14-MUTEGRP
MUTEGRP

BEHRINGER

SHEET 1 of 1

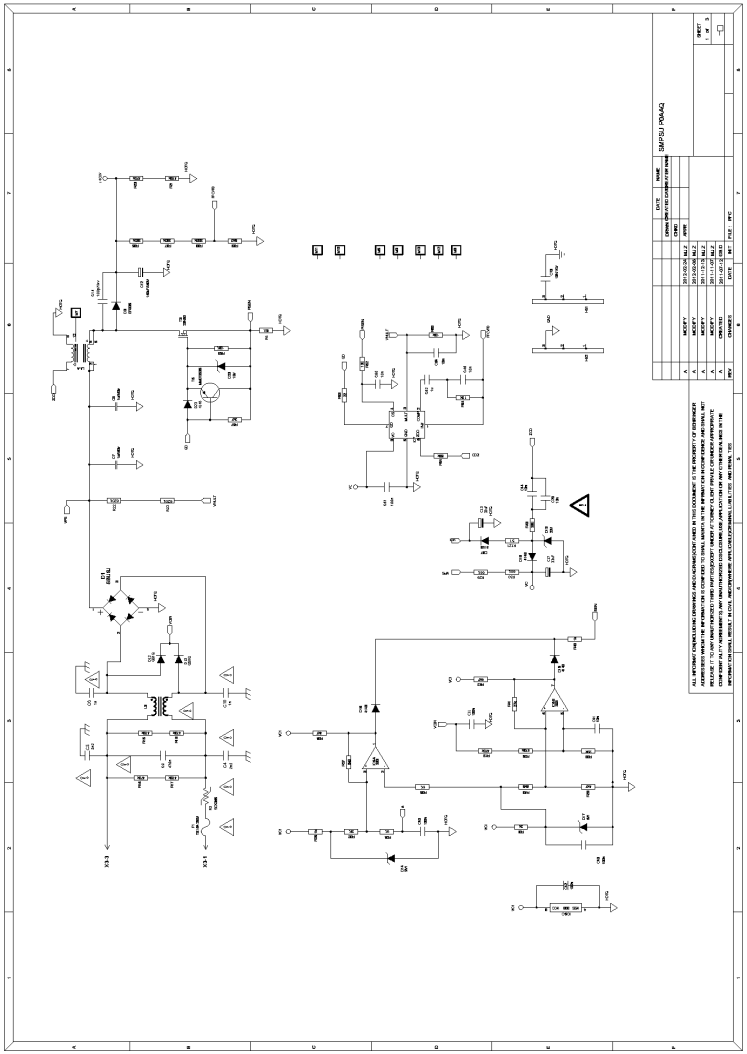

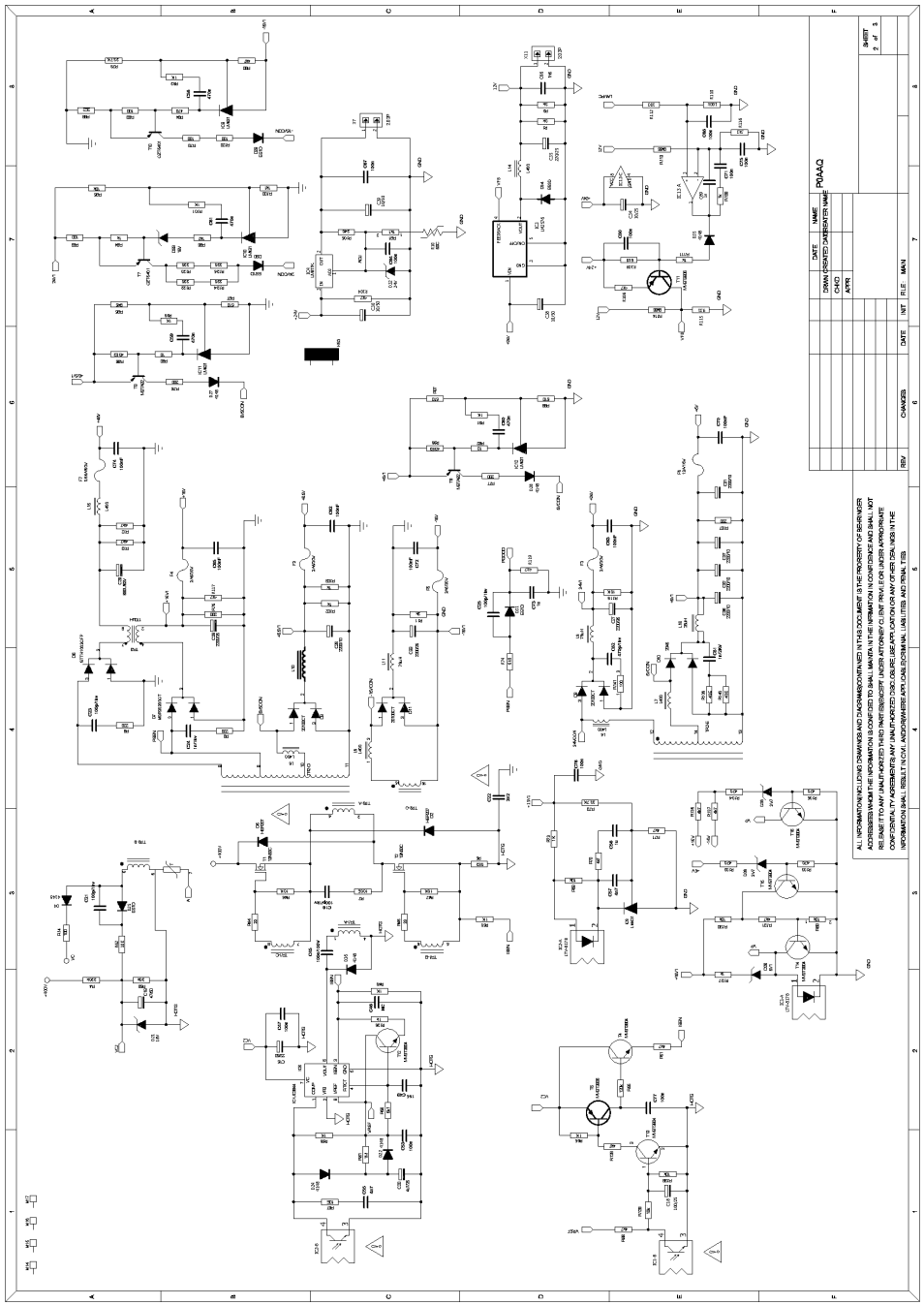

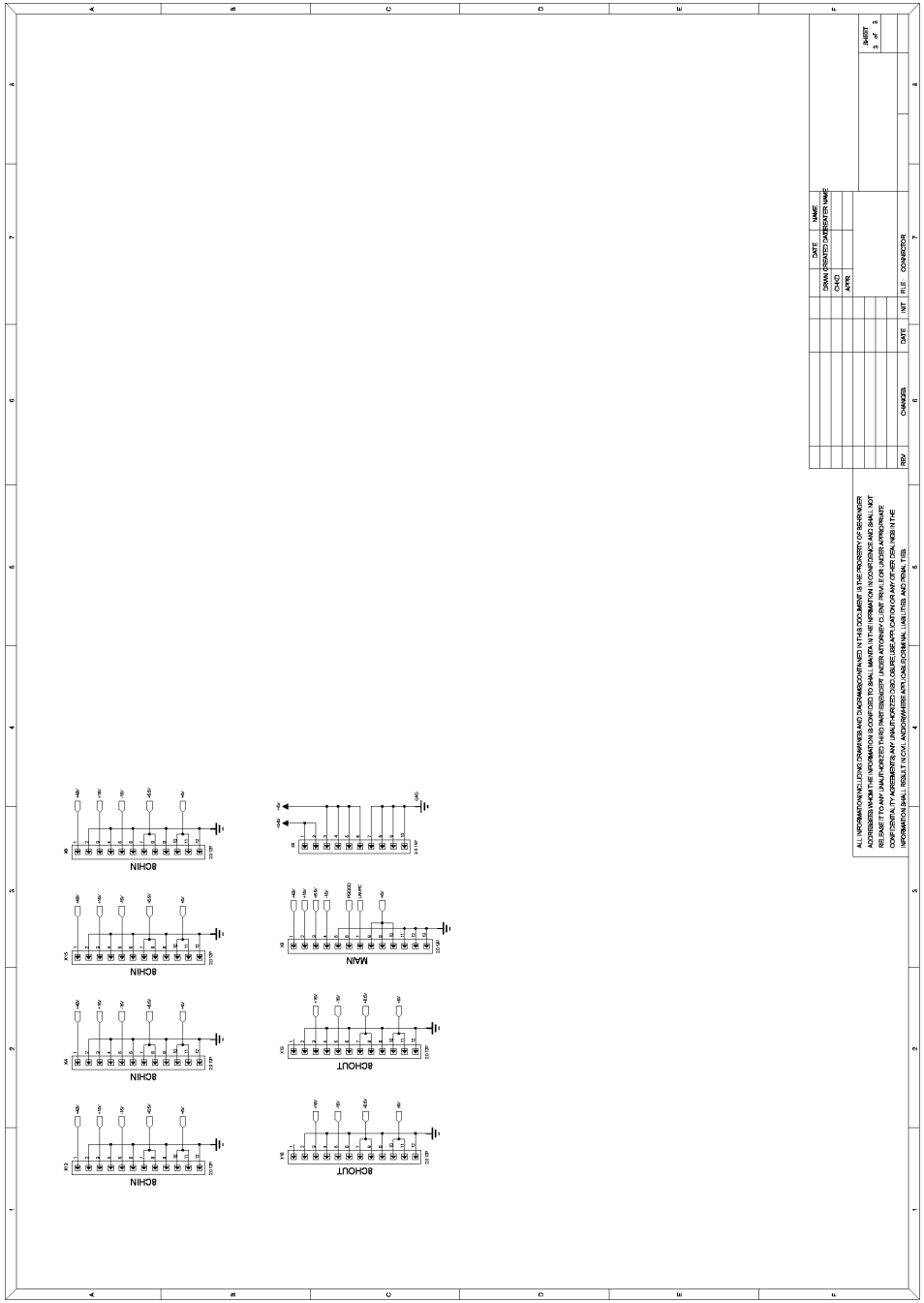
8CHIN
8CHIN
8CHIN
8CHIN
8CHOUT
8CHOUT
MAIN
SHEET
2 of 3
CONNECTOR
FILE
INT
DATE
CHANGES
REV
DATE
WAVE
DRAWN
CHK'D
APPR'D
ALL INFORMATION CONTAINED IN THIS DOCUMENT IS THE PROPERTY OF BEHRINGER

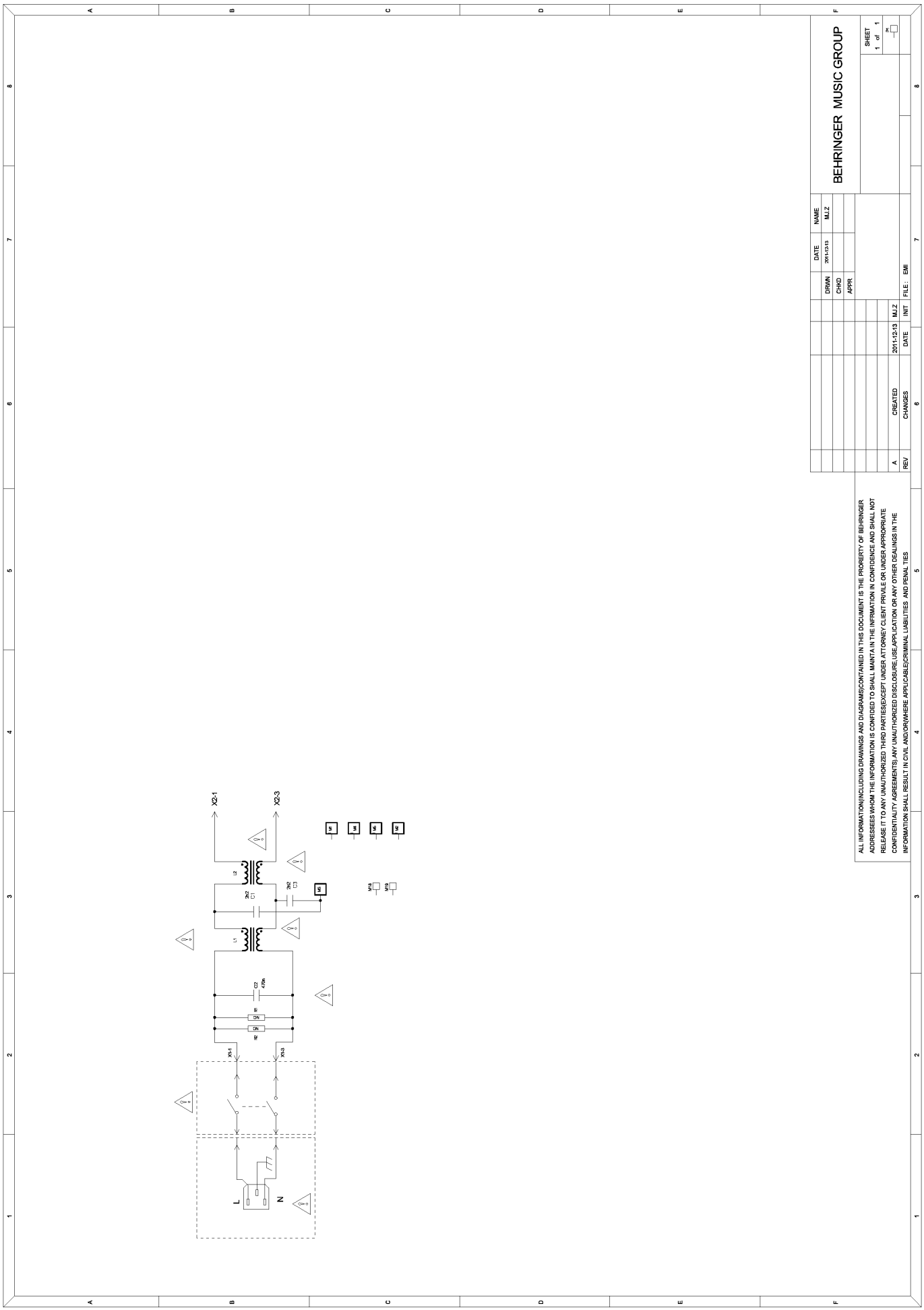
X2-1
X2-3
L2
L1
2k2
C1
2k2
C3
C2
470n
R1
1k5
R2
1k5
X14
X13
L
N
VR8
VR9
BEHRINGER MUSIC GROUP
DRWN
CHKD
APPR
DATE
2011-12-13
NAME
M.J.Z
SHEET
1 of 1
A
CREATED
2011-12-13
M.J.Z
REV
CHANGES
DATE
INIT
FILE: EMI
ALL INFORMATION(INCLUDING DRAWINGS AND DIAGRAMS)CONTAINED IN THIS DOCUMENT IS THE PROPERTY OF BEHRINGER
ADDRESSEES WHOM THE INFORMATION IS CONFIDED TO SHALL MAINTA IN THE INFRMATION IN CONFIDENCE AND SHALL NOT
RELEASE IT TO ANY UNAUTHORIZED THIRD PARTIES(EXCEPT UNDER ATTORNEY CLIENT PRIVILE OR UNDER APPROPRIATE
CONFIDENTIALITY AGREEMENTS) ANY UNAUTHORIZED DISCLOSURE USE APPLICATION OR ANY OTHER DEALINGS IN THE
INFORMATION SHALL RESULT IN CIVIL AND/OR(WHERE APPLICABLE)CRIMINAL LIABILITIES AND PENAL TIES

Hi Pcb Assemblies

	Quantity	Unit	S.Sku	M.Sku	Description	Reference Designators	Notes
1	1.0000	PC	Q05-00001-77101	A05-00001-77101	PCB ASSEMBLY;1;A;HI;SMPSU37;MAIN		
2	1.0000	PC	Q05-00002-77101	A05-00002-77101	PCB ASSEMBLY;2;A;HI;SMPSU37;EMI		
3	1.0000	PC	Q05-AAQ04-00103	A05-AAQ04-00103	PCB ASSEMBLY;P0AAQ;4;C;HI;AUXCON;		
4	1.0000	PC	Q05-AAQ05-00103	A05-AAQ05-00103	PCB ASSEMBLY;P0AAQ;5;C;HI;CRCON;		
5	1.0000	PC	Q05-AAQ15-00105	A05-AAQ15-00106	PCB ASSEMBLY;P0AAQ;15;F;HI;MAIN		
6	2.0000	PC	Q05-AAQ17-00101	A05-AAQ17-00101	PCB ASSEMBLY;P0AAQ;17;A;HI;PHONEJACK		
7	2.0000	PC		A05-AAQ19-00102	PCB ASSEMBLY;P0AAQ;19;B;HI;8CHIN		
8	2.0000	PC		A05-AAQ19-20102	PCB ASSEMBLY;P0AAQ;19;B;HI;WITHOUT FPC20;8CHIN		
9	1.0000	PC	Q05-AAQ20-02101	A05-AAQ20-02101	PCB ASSEMBLY;P0AAQ;20;A;HI;WITHOUT FPC;8CHOUT		
10	1.0000	PC		A05-AAQ20-03101	PCB ASSEMBLY;P0AAQ;20;A;HI;8CHOUT		
11	1.0000	PC	Q05-ASF16-00108	A05-ASF16-00108	PCB ASSEMBLY;P0ASF;PCB:16;REV:H;HI;MCU		
12	1.0000	PC		A05-AZP00-00101	PCB ASSEMBLY;P0AZP;X-USB;A;HI		
13	1.0000	PC		A05-B1S03-00101	PCB ASSEMBLY;P0B1S;3;A;HI;CHEDIT		
14	1.0000	PC		A05-B1S06-00101	PCB ASSEMBLY;P0B1S;6;A;HI;FADER_L		
15	1.0000	PC		A05-B1S07-00101	PCB ASSEMBLY;P0B1S;7;A;HI;FADER_M		
16	1.0000	PC		A05-B1S08-00101	PCB ASSEMBLY;P0B1S;8;A;HI;FADER_R		
17	1.0000	PC		A05-B1S09-00101	PCB ASSEMBLY;P0B1S;9;A;HI;SCRNCTRL		
18	1.0000	PC		A05-B1S10-00103	PCB ASSEMBLY;P0B1S;PCB:10;REV:C;HI;TBMJACK		
19	1.0000	PC		A05-B1S11-00101	PCB ASSEMBLY;P0B1S;11;A;HI;TBMON		
20	1.0000	PC		A05-B1S12-00101	PCB ASSEMBLY;P0B1S;12;A;HI;USBH		
21	1.0000	PC		A05-B1S13-00101	PCB ASSEMBLY;P0B1S;13;A;HI;USERCTRL		
22	1.0000	PC		A05-B1S14-00101	PCB ASSEMBLY;P0B1S;14;A;HI;MUTEGRP		

Service Assemblies

	Quantity	Unit	S.Sku	M.Sku	Description	Reference Designators	Notes
1			Q01-AZP00-00000	A09-AZP00-00000	SPARE PART;P0AZP	[EXTRA SPARE]	
2				A09-AAQ01-20002	SPARE PART;P0AAQ;REV:B;VERSION:INPUT;WITHOUT FPC20;8CHIN	[EXTRA SPARE]	
3				A09-AAQ01-00002	SPARE PART;P0AAQ;REV:B;VERSION:8CHIN	[EXTRA SPARE]	
4			Q09-AAQ00-20002	A09-AAQ00-20002	SPARE PART;P0AAQ;REV:B;INPUT;WITHOUT FPC20;8CHIN	[EXTRA SPARE]	
5			Q09-AAQ00-00002	A09-AAQ00-00002	SPARE PART;P0AAQ;REV:B;8CHIN	[EXTRA SPARE]	
6			Q04-B1S00-79000	A04-B1S00-79000	SUB ASSEMBLY;P0B1S;FADER_R	[EXTRA SPARE]	
7			Q04-B1S00-43000	A04-B1S00-43000	SUB ASSEMBLY;P0B1S;MUTEGRP	[EXTRA SPARE]	
8			Q04-B1S00-16000	A04-B1S00-16000	SUB ASSEMBLY;P0B1S;FADER_M	[EXTRA SPARE]	
9				A01-AZP00-00000	MAIN ASSEMBLY;P0AZP;X-USB	[EXTRA SPARE]	
10			Q04-B1S00-02000	A04-B1S00-02000	SUB ASSEMBLY;P0B1S;FADER_L	[EXTRA SPARE]	

Cable

	Quantity	Unit	S.Sku	M.Sku	Description	Reference Designators	Notes
1	1.0000	PC	Q81-00000-48384	A81-00000-48384	WIRE HARNESS;AWG:18;UL1672;3.96 MM;3;COMMON;PIN1 RED;150 MM;2P(JS1121-3P);NO PIN2;PIN3 BLACK		PSU02/X2 PSU01/X3
2	1.0000	PC	Q81-00000-48410	A81-00000-48410	WIRE HARNESS;AWG:18;UL1672;3.96 MM;3;COMMON;PIN1 RED;80 MM;One side S/T:7MM;Other side JS1121-3P;NO PIN2		AC INLET L AC INLET N , PSU02/X1
3	1.0000	PC		A81-00000-60860	WIRE HARNESS;AWG:26;UL2468;2 MM;13;150 MM;P1018-13P;A2006H-13P		
4	2.0000	PC	Q81-00000-60863	A81-00000-60863	WIRE HARNESS;AWG:26;UL2468;2 MM;12;500 MM;P1018-12P;A2006H-12P		
5	25.0000	PC		A81-00000-60871	WIRE HARNESS;AWG:26;UL2468;2 MM;2;50 MM;A2006H-2P;S/T:5MM		
6	1.0000	PC		A81-00000-60878	WIRE HARNESS;AWG:26;UL2468;2 MM;6;60 MM;P1018-6P;A2006H-6P		
7	2.0000	PC		A81-00000-61276	WIRE HARNESS;AWG:26;UL2468;2 MM;12;400 MM;P1018-12P;A2006H-12P		
8	1.0000	PC		A81-00000-63483	WIRE HARNESS;AWG:26;UL2547;2 MM;3;PIN1 RED;190 MM;A2006H-03;P1018-03;SHIELD PIN3	[P0B1S:11: {1.0}(X5)]	
9	1.0000	PC		A81-00000-64880	WIRE HARNESS;AWG:26;UL2468;2 MM;2;630 MM;P1018-2P;A2006H-2P		
10	1.0000	PC		A81-00000-65637	WIRE HARNESS;AWG:26;UL2547;2 MM;5;PIN1 RED;700 MM;A2006H;P1018;SHIELD PIN5	[P0B1S:12: {1.0}(X3)]	
11	5.0000	PC		A81-00000-66506	WIRE HARNESS;AWG:26;UL2468;2 MM;4;COMMON;60 MM;P1018-4P;A2006H-4P	[P0B1S:06: {1.0}(X10)]	
12	2.0000	PC		A81-00000-66508	WIRE HARNESS;AWG:26;UL2468;2 MM;8;COMMON;60 MM;A2006H-8P;P1018-8P	[P0B1S:06: {1.0}(X11)]	
13	1.0000	PC		A81-00000-66510	WIRE HARNESS;AWG:26;UL2468;2 MM;12;COMMON;100 MM;A2006H-12P;P1018-12P	[P0B1S:09: {1.0}(X3)]	
14	2.0000	PC		A81-00000-66512	WIRE HARNESS;AWG:26;UL2468;2 MM;12;COMMON;500 MM;A2006H-12P;P1018-12P		
15	2.0000	PC		A81-00000-66517	WIRE HARNESS;AWG:26;UL2468;2 MM;6;COMMON;60 MM;A2006H-6P;P1018-6P	[P0B1S:03: {1.0}(X2)]	
16	2.0000	PC		A81-00000-66520	WIRE HARNESS;AWG:26;UL2468;2 MM;12;COMMON;400 MM;A2006H-12P;P1018-12P	[P0AAQ:20: {1.0}(X1)]	
17	25.0000	PC		A81-00000-66521	WIRE HARNESS;AWG:26;UL2468;2 MM;2;COMMON;55 MM		
18	1.0000	PC		A81-00000-66526	WIRE HARNESS;AWG:26;UL2468;2 MM;5;COMMON;60 MM;A2006H-5P;P1018-5P	[P0B1S:12: {1.0}(X2)]	
19	1.0000	PC		A81-00000-66528	WIRE HARNESS;AWG:26;UL2468;2 MM;16;COMMON;120 MM;A2006H-16P;P1018-16P	[P0B1S:11: {1.0}(X3)]	
20	1.0000	PC		A81-00000-66530	WIRE HARNESS;AWG:26;UL2468;2 MM;13;COMMON;150 MM;A2006H-13P;P1018-13P	[P0AAQ:15: {1.0}(X1)]	PUS01/X9
21	1.0000	PC		A81-00000-66537	WIRE HARNESS;AWG:26;UL2468;2 MM;3;COMMON;400 MM;A2006H-3P;P1018-3P	[P0B1S:11: {1.0}(X2)]	
22	1.0000	PC		A81-00000-66539	WIRE HARNESS;AWG:26;UL2468;2 MM;13;COMMON;70 MM;A2006H-13P;P1018-13P	[P0B1S:14: {1.0}(X1)]	
23	1.0000	PC		A81-00000-66683	WIRE HARNESS;AWG:26;UL2468;2 MM;10;COMMON;520 MM	[P0B1S:08: {1.0}(X24)]	
24	1.0000	PC		A81-00000-66684	WIRE HARNESS;AWG:26;UL2468;2 MM;4;COMMON;680 MM	[P0B1S:13: {1.0}(X3)]	
25	1.0000	PC		A81-00000-66685	WIRE HARNESS;AWG:26;UL2468;2 MM;2;COMMON;630 MM	[P0B1S:10: {1.0}(X8)]	PSU01/X11
26	1.0000	PC		A81-00000-70367	WIRE HARNESS;1200 MM;AWG:26;UL2468;2 MM;15;A2006H-15P;P1018-15P	[P0AAQ:15: {1.0}(X9)]	PCB11TBMOM/X1
27	1.0000	PC	Q81-00000-70554	A81-00000-70554	WIRE HARNESS;1100 MM;AWG:26;UL2547;2 MM;3;PIN1 RED;PIN3 SHIELD;P1018-3P;A2006H-3P	[P0B1S:10: {1.0}(X7)]	PCB17 PHONE JACK(1)/X1
28	2.0000	PC	Q81-00000-70695	A81-00000-70695	WIRE HARNESS;260 MM;AWG:26;UL2468;2 MM;12;P1018-12P,A2006H-12P		
29	1.0000	PC	Q85-00000-23550	A85-00000-23550	WIRE HARNESS;0.5 MM;40;400MM;FLEX FLAT CABLE		PCB15 MAIN/X5 LCD
30	1.0000	PC	Q85-00000-39129	A85-00000-39129	WIRE HARNESS;1 MM;20;140 MM;FLEX FLAT CABLE		PCB15 MAIN/14 ,PCB02 8CH OUT(1)/X3

	Quantity	Unit	S.Sku	M.Sku	Description	Reference Designators	Notes
31	1.0000	PC	Q85-00000-39130	A85-00000-39130	WIRE HARNESS;1 MM;24;280 MM;FLEX FLAT CABLE		PCB04 AUXCON/X14, PCB15 MAIN/X15
32	5.0000	PC	Q85-00000-39131	A85-00000-39131	WIRE HARNESS;1 MM;20;100 MM;FLEX FLAT CABLE		PCB02 8CH OUT(1)/X4---PCB02 8CH OUT(2)/X3 PCB15 MAIN/X3---PCB01 8CH IN(1)/X4 PCB01 8CH IN(1)/X3---PCB01 8CH IN(2)/X4 PCB15 MAIN/X4---PCB01 8CH IN(3)/X4 PCB01 8CH IN(3)/X3---PCB01 8CH IN(4)/X4
33	1.0000	PC		A81-00000-66685	WIRE HARNESS;AWG:26;UL2468;2 MM;2;COMMON;630 MM	[P0B1S:10: {1.0}(X8)]	(EU, UL, UK, SAA, BR, AR, HM)
34	1.0000	PC	Q76-15032-55649	A76-15032-55649	CABLE;AC-CORD;CLASS II;W/POLYBAG;JAPAN;LENGTH:150cm;POLES:3;APPROVAL:PSE;JS15S 3 + VCTF 3x0.75mm2 + V1528		(HM, SH)
35	1.0000	PC	Q85-00000-39130	A85-00000-39130	WIRE HARNESS;1 MM;24;280 MM;FLEX FLAT CABLE		(EU, UL, UK, SAA, BR, AR, HM)
36	1.0000	PC	Q85-00000-23550	A85-00000-23550	WIRE HARNESS;0.5 MM;40;400MM;FLEX FLAT CABLE		(EU, UL, UK, SAA, BR, AR, HM)
37	1.0000	PC		A81-00000-70367	WIRE HARNESS;1200 MM;AWG:26;UL2468;2 MM;15;A2006H-15P;P1018-15P	[P0AAQ:15: {1.0}(X9)]	(EU, UL, UK, SAA, BR, AR, HM)
38	1.0000	PC	Q81-00000-70554	A81-00000-70554	WIRE HARNESS;1100 MM;AWG:26;UL2547;2 MM;3;PIN1 RED;PIN3 SHIELD;P1018-3P;A2006H-3P	[P0B1S:10: {1.0}(X7)]	(EU, UL, UK, SAA, BR, AR, HM)
39	0.0000	PC		A76-18050-06505	CABLE;AC-CORD;LENGTH:180cm;VERSION:SAA;PLUG:HE105 ISOLATED;SAA H05VV-F 3x0.75mm2;CONN.HP-3;PANYU		(SAA)
40	1.0000	PC		A81-00000-66530	WIRE HARNESS;AWG:26;UL2468;2 MM;13;COMMON;150 MM;A2006H-13P;P1018-13P	[P0AAQ:15: {1.0}(X1)]	(EU, UL, UK, SAA, BR, AR, HM)
41	1.0000	PC	Q81-00000-48410	A81-00000-48410	WIRE HARNESS;AWG:18;UL1672;3.96 MM;3;COMMON;PIN1 RED;80 MM;One side S/T:7MM;Other side JS1121-3P;NO PIN2		(EU, UL, UK, SAA, BR, AR, HM)
42	1.0000	PC	Q76-15042-05624	A76-15042-05624	CABLE;AC-CORD;W/POLYBAG;LENGTH:150cm;H05VV-F3G0.75MM2;VERSION;UK;SPEC.NO:05624		(UK)
43	1.0000	PC	Q76-18050-47490	A76-18050-47490	CABLE;AC-CORD;LENGTH:180cm;VERSION:SAA;PLUG:HE105 ISOLATED;SAA H05VV-F 3x0.75mm2;CONN.HP-3;SPEC.NO:47490		(SAA)
44	1.0000	PC	Q76-15222-06417	A76-15222-06417	CABLE;AC-CORD;W/POLYBAG;LENGTH:152cm;AWG:18;VERSION;UL;SPEC.NO:06417		(UL)
45	1.0000	PC	Q76-00000-05305	A76-00000-05305	CABLE;AC-CORD;3;BR;1500 MM;Plug + Connector:375+730;H05VV-F 3G0.75		(BR)
46	5.0000	PC	Q85-00000-39131	A85-00000-39131	WIRE HARNESS;1 MM;20;100 MM;FLEX FLAT CABLE		(EU, UL, UK, SAA, BR, AR, HM)
47	1.0000	PC	Q85-00000-39129	A85-00000-39129	WIRE HARNESS;1 MM;20;140 MM;FLEX FLAT CABLE		(EU, UL, UK, SAA, BR, AR, HM)
48	1.0000	PC	Q76-15212-03119	A76-15212-03119	CABLE;AC-CORD;W/POLYBAG;LENGTH:152cm;H05VV-F 3G 0.75MM2;VERSION;EU;SPEC.NO:03119		(EU)
49	1.0000	PC	Q81-00000-48384	A81-00000-48384	WIRE HARNESS;AWG:18;UL1672;3.96 MM;3;COMMON;PIN1 RED;150 MM;2P(JS1121-3P);NO PIN2;PIN3 BLACK		(EU, UL, UK, SAA, BR, AR, HM)
50	1.0000	PC	Q76-00000-13573	A76-00000-13573	CABLE;AC-CORD;3;AR;1500 MM;Plug + Connector:321+730;H05VV-F 3G0.75		(AR)

Capacitor

	Quantity	Unit	S.Sku	M.Sku	Description	Reference Designators	Notes
1	5.0000	PC			CAP E;10uF;6V;PITCH:2mm5;5mm x 11mm;VERTICAL 12.7-15-9mm	[P0B1S:6: {3.0}(C5-C7)]	*NOT available in DP
2	9.0000	PC			CAP E;220uF;10V;PITCH:2mm5;6mm x 11mm;VERTICAL 12.7-15-9mm	[P0B1S:6: {3.0}(C1-C2,C4)]	*NOT available in DP
3	2.0000	PC			CAP E;100uF;16V;PITCH:2mm5;5mm x 11mm;VERTICAL 12.7-15-9mm	[P0AAQ:15: {2.0}(C46,C65)]	*NOT available in DP
4	4.0000	PC			CAP E;220uF;16V;PITCH:2mm5;6.3mm x 12mm;VERTICAL 12.7-15-9mm	[P0AAP:06: {1.0}(C39)]	*NOT available in DP
5	1.0000	PC			CAP E;220uF;16V;PITCH:2mm5;6mm x 12mm;VERTICAL 12.7-15-9mm	[P0B1S:03: {1.0}(C7)]	*NOT available in DP
6	33.0000	PC			CAP E;1mF;16V;PITCH:5mm;10mm x 16mm;VERTICAL 12.7-15-9mm	[P0AAQ:15: {1.0}(C247)]	*NOT available in DP
7	19.0000	PC			CAP E;47uF;25V;PITCH:2mm5;5mm x 11mm;UNCUT;VERTICAL 12.7-15-9mm	[P0AAQ:15: {19.0}(C11,C14,C32,C42,C64,C78,C88-C89,C95,C102-C103,C110,C127,C136,C138,C145,C151-C152,C156)]	*NOT available in DP
8	43.0000	PC			CAP E;47uF;25V;PITCH:2mm5;5mm x 11mm;VERTICAL 12.7-15-9mm	[P0AZP:00: {2.0}(C31,C44)]	*NOT available in DP
9	28.0000	PC			CAP E;47uF;25V;PITCH:2mm5;6mm3 x 7mm;VERTICAL 12.7-15-9mm	[P0AAQ:20: {14.0}(C24,C31-C34,C44,C68-C75)]	*NOT available in DP
10	136.0000	PC			CAP E;100uF;25V;PITCH:2mm5;6mm x 12mm;VERTICAL 12.7-15-9mm	[P0AAP:06: {26.0}(C43-C44,C78-C93,C182-C189)]	*NOT available in DP
11	6.0000	PC			CAP E;1uF;50V;PITCH:2mm5;5mm x 11mm;VERTICAL 12.7-15-9mm	[P0AAP:06: {1.0}(C38)]	*NOT available in DP
12	2.0000	PC			CAP E;4uF7;50V;PITCH:2mm5;5mm x 11mm;VERTICAL 12.7-15-9mm	[P0AAQ:15: {2.0}(C56,C63)]	*NOT available in DP
13	59.0000	PC			CAP E;10uF;50V;PITCH:2mm5;5mm x 11mm;VERTICAL 12.7-15-9mm	[P0AZP:00: {1.0}(C41)]	*NOT available in DP
14	4.0000	PC			CAP E;47uF;50V;PITCH:2mm5;6mm x 11mm;VERTICAL 12.7-15-9mm	[P0B1S:11: {4.0}(C6,C11,C17-C18)]	*NOT available in DP
15	32.0000	PC			CAP E;47uF;63V;PITCH:2mm5;6mm x 11mm;VERTICAL 12.7-15-9mm	[P0AAP:06: {8.0}(C246-C253)]	*NOT available in DP
16	12.0000	PC			CAP E;1 mF;6V3;PITCH:5 MM;SIZE:8X12MM5;AI HIGH:15MM;TAPE:12.7-15-9MM;85C	[P0AAP:06: {2.0}(C326-C327)]	*NOT available in DP
17	3.0000	PC			CAP E;220 uF;35 V;20 %;RADIAL;SIZE:8X11.5;PITCH:3.5MM;PRE-CUT:3.2+-0.3	[P0B1S:06: {1.0}(C3)]	*NOT available in DP
18	1.0000	PC			CAP E;100uF;10V;PITCH:2mm5;5mm x 11mm;PRECUT:3mm2 -0/+0mm2	[P0AAQ:15: {1.0}(C8)]	*NOT available in DP
19	2.0000	PC			CAP E;47uF;25V;PITCH:2mm5;5mm x 11mm;PRECUT:3mm2 -0/+0mm2	[P0AAQ:05: {2.0}(C1-C2)]	*NOT available in DP
20	3.0000	PC			CAP CER;1 nF;2 kV;X7R;10 %;SMD805;SMD1206	[1:01: {1.0}(C81)]	*NOT available in DP
21	6.0000	PC			CAP CER;100 nF;100 V;X7R;10 %;SMD805	[1:01: {6.0}(C62-C63,C65,C70,C72,C74)]	*NOT available in DP
22	2.0000	PC			CAP CER;470pF;50V;10%;PITCH:5mm;DISC;VERTICAL 12.7-15-9mm	[P0B1S:10: {2.0}(C1-C2)]	*NOT available in DP
23	9.0000	PC			CAP CER;1.5 nF;50 V;C0G;2 %;SMD805	[1:01: {1.0}(C49)]	*NOT available in DP
24	16.0000	PC			CAP CER;150 pF;50 V;C0G;5 %;SMD603	[P0AAQ:20: {8.0}(C60-C67)]	*NOT available in DP
25	1.0000	PC			CAP CER;4.7 uF;6.3 V;X5R;20 %;SMD603	[P0AZP:00: {1.0}(C21)]	*NOT available in DP
26	12.0000	PC			CAP CER;10 uF;6.3 V;X5R;10 %;SMD805;YAGEO (CC85KRX5R6BB106)	[P0AAQ:15: {12.0}(C25,C27-C29,C34-C35,C38,C43,C48,C50,C70,C81)]	*NOT available in DP
27	12.0000	PC			CAP CER;10uF;6V3;X5R;20%;SMT805	[P0AZP:00: {4.0}(C1,C3,C9-C10)]	*NOT available in DP
28	2.0000	PC			CAP CER;1uF;10V;+80% /-20%;SMT603	[P0AAQ:16: {2.0}(C19,C27)]	*NOT available in DP
29	13.0000	PC			CAP CER;1uF;10V;X5R;10%;SMD603	[P0AZP:00: {3.0}(C16-C17,C51)]	*NOT available in DP
30	58.0000	PC			CAP CER;1uF;16V;X7R;10%;SMT805	[P0B1S:06: {16.0}(C44-C45,C47-C48,C50-C51,C53-C54,C56-C57,C59-C60,C62-C63,C65-C66)]	*NOT available in DP
31	52.0000	PC			CAP CER;100nF;10V;X5R;10%;SMT402;(MURATA GRM155R61A104KA01E)	[P0AAQ:16: {52.0}(C1,C6-C12,C14-C16,C18,C20-C22,C28,C33,C35-C37,C39-C41,C45-C46,C50-C72,C75-C78)]	*NOT available in DP
32	6.0000	PC			CAP CER;10 nF;16 V;Y5V;+80%/-20 %;SMD402	[P0AAQ:16: {6.0}(C2-C4,C13,C34,C38)]	*NOT available in DP
33	13.0000	PC			CAP CER;100nF;25V;X5R;10%;SMT603	[P0AAQ:15: {13.0}(C33,C39,C58,C68,C83,C94,C106,C108,C126,C131,C135,C155,C159)]	*NOT available in DP
34	3.0000	PC			CAP CER;220pF;25V;C0G;10%;SMT805	[P0B1S:06: {1.0}(C19)]	*NOT available in DP

	Quantity	Unit	S.Sku	M.Sku	Description	Reference Designators	Notes
35	92.0000	PC			CAP CER;100nF;25V;X7R;10%;SMT805	[P0AZP:00: {2.0}(C23,C42)]	*NOT available in DP
36	2.0000	PC			CAP CER;470nF;25V;X7R;10%;SMT805	[1:01: {2.0}(C58,C61)]	*NOT available in DP
37	1.0000	PC			CAP CER;100nF;25V;X7R;10%;SMT1206	[1:01: {1.0}(C76)]	*NOT available in DP
38	98.0000	PC			CAP CER;10pF;50V;10%;SMT603	[P0AZP:00: {2.0}(C46-C47)]	*NOT available in DP
39	2.0000	PC			CAP CER;20pF;50V;20%;SMT603	[P0AAQ:16: {2.0}(C29-C30)]	*NOT available in DP
40	98.0000	PC			CAP CER;22pF;50V;10%;SMT603	[P0AAQ:15: {2.0}(C1-C2)]	*NOT available in DP
41	46.0000	PC			CAP CER;47pF;50V;5%;COG(NPO);SMT603	[P0AAQ:15: {12.0}(C67,C80,C85-C86,C105,C111,C118-C119,C134,C146,C153-C154)]	*NOT available in DP
42	87.0000	PC			CAP CER;100pF;50V;20%;SMT603	[P0AAQ:04: {12.0}(C33-C38,C41,C43,C56-C57,C60-C61)]	*NOT available in DP
43	128.0000	PC			CAP CER;330pF;50V;C0G;5%;SMD603	[P0AAP:06: {32.0}(C214-C229,C238-C245,C255,C257,C259,C261,C263,C265,C267,C269)]	*NOT available in DP
44	6.0000	PC			CAP CER;470pF;50V;10%;SMT603	[P0AAQ:15: {4.0}(C180-C183)]	*NOT available in DP
45	27.0000	PC			CAP CER;1nF;50V;10%;SMT603	[P0AAQ:15: {27.0}(C52,C109,C189,C191,C193,C195-C196,C199,C201,C205,C207,C209-C212,C215,C217,C219,C221,C223,C225,C228,C231,C235,C237,C239,C243)]	*NOT available in DP
46	1.0000	PC			CAP CER;1nF2;50V;10%;SMT603	[P0AAQ:15: {1.0}(C53)]	*NOT available in DP
47	16.0000	PC			CAP CER;1nF5;50V;C0G;5%;SMT603;(MURATA GRM1885C1H152JA01D)	[P0AAQ:20: {8.0}(C76,C78-C79,C81-C82,C84-C85,C87)]	*NOT available in DP
48	16.0000	PC			CAP CER;2nF2;50V;C0G;5%;SMT603;(MURATA GRM1885C1H222JA01D)	[P0AAQ:20: {8.0}(C48-C55)]	*NOT available in DP
49	12.0000	PC			CAP CER;10nF;50V;10%;SMT603	[P0AAQ:15: {12.0}(C36-C37,C40,C44,C51,C57,C60,C124,C236,C240,C245-C246)]	*NOT available in DP
50	1.0000	PC			CAP CER;10nF;50V;X7R;10%;SMT603	[P0AZP:00: {1.0}(C13)]	*NOT available in DP
51	76.0000	PC			CAP CER;100nF;50V;10%;SMT603	[P0AZP:00: {23.0}(C2,C4-C5,C8,C12,C14-C15,C18-C20,C22,C24,C26-C29,C32-C33,C35-C37,C45,C50)]	*NOT available in DP
52	10.0000	PC			CAP CER;22pF;50V;10%;SMT805	[P0B1S:06: {2.0}(C32-C33)]	*NOT available in DP
53	102.0000	PC			CAP CER;100pF;50V;10%;SMT805	[P0AAQ:04: {24.0}(C21-C32,C44-C55)]	*NOT available in DP
54	8.0000	PC			CAP CER;100pF;50V;C0G;5%;SMT805	[P0AAQ:15: {8.0}(C91-C92,C99-C100,C141-C142,C149-C150)]	*NOT available in DP
55	32.0000	PC			CAP CER;470pF;50V;10%;SMT805	[P0AAQ:20: {16.0}(C136-C151)]	*NOT available in DP
56	4.0000	PC			CAP CER;470pF;50V;C0G;5%;SMD805	[P0AAQ:15: {4.0}(C41,C47,C54,C62)]	*NOT available in DP
57	6.0000	PC			CAP CER;560pF;50V;10%;SMT805	[P0AAQ:15: {6.0}(C69,C97,C107,C128,C137,C165)]	*NOT available in DP
58	3.0000	PC			CAP CER;680pF;50V;10%;SMT805	[P0B1S:10: {3.0}(C3-C5)]	*NOT available in DP
59	67.0000	PC			CAP CER;1nF;50V;10%;SMT805	[P0AAP:06: {16.0}(C302,C304-C305,C307-C308,C310-C311,C313-C314,C316-C317,C319-C320,C322-C323,C325)]	*NOT available in DP
60	1.0000	PC			CAP CER;1nF;50V;X7R;10%;SMD805	[1:01: {1.0}(C69)]	*NOT available in DP
61	72.0000	PC			CAP CER;1nF;50V;C0G;5%;SMD805	[P0AAQ:15: {8.0}(C73,C76,C114,C117,C120,C123,C166,C169)]	*NOT available in DP
62	32.0000	PC			CAP CER;2nF2;50V;10%;SMT805	[P0AAP:06: {8.0}(C303,C306,C309,C312,C315,C318,C321,C324)]	*NOT available in DP
63	2.0000	PC			CAP CER;4nF7;50V;10%;SMT805	[1:01: {2.0}(C55,C57)]	*NOT available in DP
64	7.0000	PC			CAP CER;10nF;50V;10%;SMT805	[P0B1S:06: {1.0}(C9)]	*NOT available in DP
65	3.0000	PC			CAP CER;10nF;50V;X7R;10%;SMD805	[1:01: {3.0}(C48,C50,C54)]	*NOT available in DP
66	32.0000	PC			CAP CER;15nF;50V;10%;SMT805	[P0AAP:06: {8.0}(C70-C77)]	*NOT available in DP
67	1.0000	PC			CAP CER;47nF;50V;20%;SMT805	[P0B1S:11: {1.0}(C1)]	*NOT available in DP
68	536.0000	PC			CAP CER;100nF;50V;+80/-20%;SMT805	[P0AAQ:04: {6.0}(C39-C40,C42,C58-C59,C62)]	*NOT available in DP
69	14.0000	PC			CAP CER;100nF;50V;X7R;10%;SMT805	[1:01: {14.0}(C40-C43,C47,C51,C53,C64,C67-C68,C71,C75,C77,C80)]	*NOT available in DP
70	61.0000	PC			CAP CER;220nF;50V;10%;SMT805	[P0AAP:06: {8.0}(C155,C157,C159,C161-C165)]	*NOT available in DP
71	2.0000	PC			CAP CER;470nF;50V;10%;SMT805	[1:01: {2.0}(C59-C60)]	*NOT available in DP
72	3.0000	PC			CAP CER;1uF;50V;X7R;10%;SMD805	[1:01: {3.0}(C52,C56,C73)]	*NOT available in DP

	Quantity	Unit	S.Sku	M.Sku	Description	Reference Designators	Notes
73	1.0000	PC			CAP CER;1nF5;50V;X7R;10%;SMT1206	[1:01: {1.0}(C66)]	*NOT available in DP
74	4.0000	PC			CAP CER;15pF;50V;C0G;5%;SMD402;YAGEO	[P0AAQ:16: {4.0}(C25-C26,C73-C74)]	*NOT available in DP
75	2.0000	PC			CAP CER;10nF;100V;X7R;10%;SMD1206	[1:01: {2.0}(C44,C78)]	*NOT available in DP
76	1.0000	PC			CAP CER;100nF;100V;X7R;10%;SMD1206	[1:01: {1.0}(C45)]	*NOT available in DP
77	2.0000	PC			CAP Y2;1nF;250V;PITCH:7mm5	[1:01: {2.0}(C6,C10)]	*NOT available in DP
78	1.0000	PC			CAP Y1;2nF2;250V;P:10mm0;PRECUT:3MM1+/-0MM5	[1:01: {1.0}(C22)]	*NOT available in DP
79	4.0000	PC			CAP Y2;2nF2;275V;PITCH:7mm5;DISC;CASE:4 x 10mm	[1:01: {2.0}(C4-C5)]	*NOT available in DP
80	2.0000	PC		B12-32470-06719	CAP X2;470n;275V;P15;18*16.5*8.5;NOT PRECUT;	[1:01: {1.0}(C9)]	
81	1.0000	PC			CAP E;2.2 mF;35 V;20 %;RADIAL;16*31.5;7.5 MM;PRECUT:3.3mm	[1:01: {1.0}(C27)]	*NOT available in DP
82	5.0000	PC			CAP E;2mF2;10V;PITCH:5mm;10mm x 20mm;105C;LOW ESR;105C;VERTICAL 12.7-15-9mm	[1:01: {5.0}(C26,C31-C32,C36-C37)]	*NOT available in DP
83	1.0000	PC			CAP E;10 uF;25 V;20 %;RADIAL;5*11;2.5 MM;T&R	[1:01: {1.0}(C34)]	*NOT available in DP
84	1.0000	PC			CAP E;100 uF;25 V;20 %;RADIAL;6.3*11;2.5 MM;T&R	[1:01: {1.0}(C18)]	*NOT available in DP
85	1.0000	PC			CAP E;220 uF;25 V;20 %;RADIAL;8*11.5;5 MM;T&R	[1:01: {1.0}(C35)]	*NOT available in DP
86	3.0000	PC			CAP E;10 uF;50 V;20 %;RADIAL;5*11;2.5 MM;T&R	[1:01: {3.0}(C30,C38-C39)]	*NOT available in DP
87	1.0000	PC			CAP E;22 uF;50 V;20 %;RADIAL;6.3*11;2.5 MM;T&R	[1:01: {1.0}(C15)]	*NOT available in DP
88	2.0000	PC			CAP E;33 uF;50 V;20 %;RADIAL;6.3*11;2.5 MM;T&R	[1:01: {2.0}(C13,C17)]	*NOT available in DP
89	1.0000	PC			CAP E;47 uF;50 V;20 %;RADIAL;6.3*11;2.5 MM;T&R	[1:01: {1.0}(C19)]	*NOT available in DP
90	1.0000	PC			CAP E;680 uF;63 V;20 %;RADIAL;13*30;5 MM;PRECUT:3.2	[1:01: {1.0}(C28)]	*NOT available in DP
91	1.0000	PC			CAP E;2.2 mF;25 V;20 %;13*35;5 MM;PRECUT:3.2;GF SERIES	[1:01: {1.0}(C33)]	*NOT available in DP
92	1.0000	PC			CAP E;LOW ESR;3.3 mF;25 V;20 %;5 MM;RADIAL;13*40;Pre-CUT 3.3	[1:01: {1.0}(C29)]	*NOT available in DP
93	1.0000	PC			CAP E;220uF;25V;PITCH:3mm5;8mm x 10mm;PRECUT:3mm2 -0/+0mm2;105C;LOW ESR	[P0B1S:13: {1.0}(C7)]	*NOT available in DP
94	5.0000	PC			CAP CER;100pF;1KV;20%;PITCH:5mm;DISC;VERTICAL 12.7-15-9mm	[1:01: {1.0}(C21)]	*NOT available in DP
95	1.0000	PC			CAP CER;470pF;1KV;10%;PITCH:5mm;DISC;VERTICAL 12.7-15-9mm	[1:01: {1.0}(C82)]	*NOT available in DP
96	1.0000	PC			CAP CER;1nF;1KV;20%;PITCH:5mm;DISC;VERTICAL 12.7-15-9mm	[1:01: {1.0}(C24)]	*NOT available in DP
97	1.0000	PC			CAP CER;10nF;630V;10%;5mm*3..5mm;5mm;DISC;VERTICAL 12.7-15-9mm	[1:01: {1.0}(C79)]	*NOT available in DP
98	2.0000	PC			CAP FILM;1 uF;450 V;PPM;5 %;17.8 x 16.3 x 7.7mm;PITCH:15 mm;CL21X;FARATRONIC	[1:01: {2.0}(C7-C8)]	*NOT available in DP
99	1.0000	PC			CAP FILM;100nF;400V;MPF;PITCH:10mm;PRECUT:3mm1 +/-0mm5	[1:01: {1.0}(C11)]	*NOT available in DP
100	1.0000	PC			CAP E;47 uF;16 V;20 %;DXL:5X5MM5;SMD	[P0AAQ:16: {1.0}(C31)]	*NOT available in DP
101	1.0000	PC			CAP E;4uF7;25V;PITCH:2mm5;5mm x 11mm;105C;VERTICAL 12.7-15-9mm	[1:01: {1.0}(C20)]	*NOT available in DP
102	1.0000	PC			CAP E;105C;150 uF;450 V;20 %;25*36;10 MM;SNAP IN;HP SERIES	[1:01: {1.0}(C12)]	*NOT available in DP
103	160.0000	PC			CAP E;47uF;50V;PITCH:2mm5;6mm x 11mm;LOW LEAKAGE;VERTICAL 12.7-15-9mm	[P0AAP:06: {40.0}(C166-C173,C206-C213,C278-C301)]	*NOT available in DP

Circuit Protector

	Quantity	Unit	S.Sku	M.Sku	Description	Reference Designators	Notes
1	1.0000	PC	R22-00000-24721	B22-00000-24721	FUSE;3.15 A;V;LOW;P5.08;SIZE:8.5*8*4	[1:01: {1.0}(F1)]	
2	4.0000	PC		B22-00000-28566	FUSE;2.5 A;30V;RESETTABLE;PPTC;KRG0300250;TKS	[1:01: {4.0}(F2-F5)]	
3	1.0000	PC		B22-00000-31473	FUSE;12 A;16V;RESETTABLE;PPTC;KRG0161200SRY;TKS	[1:01: {1.0}(F6)]	
4	1.0000	PC		B22-00000-42798	FUSE;3.15 A;V;MICRO TIME LAG;8mm5x7mm7;P5.08;BEL;R		
5	1.0000	PC		B22-00000-46822	FUSE;0.65 A;60V;RESETTABLE;KRG0600065SRY;TKS	[1:01: {1.0}(F7)]	

Coil

	Quantity	Unit	S.Sku	M.Sku	Description	Reference Designators	Notes
1	2.0000	PC		B37-00000-25502	COIL;CHOKE;78 uH;COIL 2;PS176 EF25 L(S-F):78uH+/-10%@1KHZ,0.25V	[1:01: {2.0}(L9,L11)]	
2	1.0000	PC		B37-00000-25503	COIL;CHOKE;25 uH;COIL 3;PS176 EF25 L(S-F):25uH+/-10%@1KHZ,0.25V	[1:01: {1.0}(L16)]	
3	2.0000	PC		B37-00000-25506	COIL;CHOKE;7mH;COIL 6;PS176 T20X10X8 L(S-F):2mH MIN@1KHZ,0.25V	[1:01: {2.0}(L5,L7)]	
4	1.0000	PC		B37-00000-25508	COIL;CHOKE;500 uH;COIL 7;PS176 T10X5X5 L(S-F):500uH MIN@1KHZ,0.25V	[1:01: {1.0}(L15)]	
5	3.0000	PC		B37-00000-27563	COIL;CHOKE;6 mH;ET24;L:6mH MIN@1KHZ,0.25V.SG	[1:01: {1.0}(L3)]	
6	3.0000	PC		B37-00000-35431	COIL;CHOKE;1000 OHMS;SMD;SMDWCM3216S-102-2P	[P0AAQ:15: {3.0}(L9-L11)]	
7	1.0000	PC		B37-00000-40106	COIL;CHOKE;260 uH;EC2824 L(12-5,6):260uH+/-10%@1KHZ,0.25V X32 SG	[1:01: {1.0}(L4)]	
8	1.0000	PC		B37-00000-40107	COIL;CHOKE;100 uH;T50-26 L:100uH+/-10%@1KHZ,0.25V X32	[1:01: {1.0}(L14)]	
9	1.0000	PC		B37-00000-40108	COIL;CHOKE;100 uH;T80-26 L:100uH+/-10%@1KHZ,0.25V X32	[1:01: {1.0}(L10)]	
10	2.0000	PC		B37-00000-40109	COIL;CHOKE;2 mH;T17X8X7 L:2mH MIN@1KHZ,0.25V X32	[1:01: {2.0}(L6,L8)]	
11	1.0000	PC		B37-00000-40110	COIL;CHOKE;170 uH;EF25 L(4-2):170uH+/-10%@1KHZ,0.25V X32 SG	[1:01: {1.0}(TR3)]	
12	1.0000	PC		B37-31002-06265	COIL;CHOKE;1mH;T12.7X7.9X6.35	[1:01: {1.0}(TR1)]	
13	3.0000	PC	R39-00000-03394	B39-00000-03394	COIL;SMD;BEAD;SMD0805;(BLM21BD751SN1D)	[P0AZP:00: {1.0}(L3)]	
14	3.0000	PC	R39-00000-17453	B39-00000-17453	COIL;SMD;1040;33 uH;20%;3A5;TAPE and Reel	[P0B1S:06: {1.0}(L1)]	
15	3.0000	PC		B39-00000-19577	COIL;SMD;3.3 uH;3A;20%;SIZE:1040;TAPE and Reel	[P0AZP:00: {1.0}(L1)]	
16	1.0000	PC		B39-00000-19578	COIL;SMD;1040;2.2 uH;4A MIN;20%;TAPE and REEL	[P0AAQ:15: {1.0}(L1)]	
17	4.0000	PC		B39-21202-00018	COIL;SMD BEAD;SMD1608;(MURATA BLM18BB121))	[P0AAQ:15: {4.0}(L5-L8)]	
18	10.0000	PC		B39-21202-00651	COIL;SMD BEAD;SMD603;(MURATA BLM18AG601SN1))	[P0AAQ:16: {10.0}(L1-L2,L4-L11)]	
19	64.0000	PC	R39-26000-21049	B39-26000-21049	COIL;SMD;BEAD;(BLM21AG601S)	[P0AAP:06: {16.0}(L1-L16)]	

Computer

	Quantity	Unit	S.Sku	M.Sku	Description	Reference Designators	Notes
1	1.0000	PC	R51-00000-59331	B51-00000-59331	MEMORY CARD;P0AAQ;128MB industrial grade SLC microSD		

Connector

	Quantity	Unit	S.Sku	M.Sku	Description	Reference Designators	Notes
1	1.0000	PC	R83-00000-11200	B83-00000-11200	USB CONNECTOR;4;VERTICAL;CHUNSHENG;USB-A-110BK-EP	[P0B1S:12: {1.0}(X1)]	
2	1.0000	PC	R83-00000-17677	B83-00000-17677	CONNECTOR;40;TX24-40R-LT-H1E	[P0AAQ:15: {1.0}(X8)]	
3	1.0000	PC		B83-00000-17678	CONNECTOR;40;TX25-40P-LT-H1E	[P0AZP:00: {1.0}(X1)]	
4	12.0000	PC	R83-00000-17806	B83-00000-17806	CONNECTOR;20;1 MM;SMD;FPC20 VERTICAL	[P0AAQ:15: {3.0}(X3-X4,X14)]	
5	2.0000	PC		B83-00000-17833	CONNECTOR;24;1 MM;SMD;FPC24 VERTICAL	[P0AAQ:04: {1.0}(X14)]	
6	1.0000	PC		B83-00000-18408	CONNECTOR;40;0.5 MM;SMD;FH12-40S-0.5SV	[P0AAQ:15: {1.0}(X5)]	
7	29.0000	PC		B83-00000-50403	CONNECTOR;FFC;28 PIN;0.5 MM;SMD	[P0B1S:06: {8.0}(LD13-LD20)]	
8	1.0000	PC		B83-00000-57291	CONNECTOR;MICRO SD;HINGE;8;GOLD;SMD;MOLEX: 5009010801	[P0AAQ:16: {1.0}(X1)]	
9	2.0000	PC	R83-20184-37925	B83-20184-37925	CONNECTOR;FEMALE;ANGLED;USB;SINGLE;TYPE:B	[P0AZP:00: {1.0}(X6)]	
10	6.0000	PC		B84-22000-06018	CRIMP TERMINAL;PITCH:3mm96;AWG18-22;A3963TOP-2		
11	274.0000	PC	R84-25016-06014	B84-25016-06014	CRIMP TERMINAL;PITCH:2mm0;AWG24-30;A2008TOP-2		
12	1.0000	PC		B84-42050-00155	CRIMP CONNECTOR;LUG;INNER DIA:4mm3;AWG 14-18;WIRE MOUNT;STRAIGHT		
13	5.0000	PC		B93-00000-51731	BARE WIRE;2;SMD1206	[P0AAQ:15: {5.0}(R214-R215,R217,R220-R221)]	
14	1.0000	PC	R93-80000-01038	B93-80000-01038	CONNECTOR;BATTERY HOLDER;(H2611)	[P0AAQ:15: {1.0}(X10)]	
15	1.0000	PC	R95-00000-18075	B95-00000-18075	CONNECTOR;XLR;4;GOLD;FEMALE;NC4FAV	[P0B1S:10: {1.0}(X4)]	
16	2.0000	PC	R95-00000-18292	B95-00000-18292	CONNECTOR;XLR;8;2.54 MM;SHIELDED;NEUTRIK: NE8FBH	[P0AAQ:15: {2.0}(X20-X21)]	
17	17.0000	PC	R95-00000-52553	B95-00000-52553	CONNECTOR;XLR;SOCKET;MALE;ANGLED;POLES:3;SHIELDED	[P0AAQ:15: {1.0}(X22)]	
18	2.0000	PC	R95-01320-03303	B95-01320-03303	CONNECTOR;XLR;SOCKET;MALE;STRAIGHT;POLES:3	[P0AAQ:05: {2.0}(X2-X3)]	
19	1.0000	PC	R95-14340-00164	B95-14340-00164	CONNECTOR;XLR;SOCKET;FEMALE;STRAIGHT;POLES:3;NO:06;(CHUN SHENG CT3-02HF)	[P0B1S:10: {1.0}(X1)]	
20	32.0000	PC	R95-14380-04268	B95-14380-04268	CONNECTOR;XLR;POLES:3;SOCKET;ANGLED;W/ PUSH TERMINAL	[P0AAQ:19: {8.0}(X5-X12)]	

Diode

	Quantity	Unit	S.Sku	M.Sku	Description	Reference Designators	Notes
1	2.0000	PC			DIODE;SCHOTTKY;DUAL;25A;100V;SB25100FCT;ITO-220AB	[1:01: {2.0}(D8,D11)]	*NOT available in DP
2	2.0000	PC			DIODE;HER207;DO15;RADIAL	[1:01: {2.0}(D2,D5)]	*NOT available in DP
3	130.0000	PC			DIODE;BAV103;SOD80;TEMIC	[P0AAP:06: {32.0}(D36-D37,D40-D43,D46-D49,D52-D55,D58-D61,D64-D67,D70-D73,D76-D79,D82-D83)]	*NOT available in DP
4	40.0000	PC			DIODE;BAV99;SOT23;SMD	[P0AAP:06: {10.0}(D2-D3,D20-D27)]	*NOT available in DP
5	55.0000	PC			DIODE;LL4148;LL34;TEMIC OR FC	[P0AZP:00: {1.0}(D1)]	*NOT available in DP
6	2.0000	PC			DIODE;GP;GS1G;400V;1A;DO-214AC;SMD	[1:01: {2.0}(D12-D13)]	*NOT available in DP
7	1.0000	PC			DIODE;ZENER;SMA;20V;1W;1SMA4747	[1:01: {1.0}(D19)]	*NOT available in DP
8	2.0000	PC			DIODE;ZMM02V7;SMD1206	[1:01: {2.0}(D38-D39)]	*NOT available in DP
9	2.0000	PC			DIODE;ZMM05V1;SMD1206	[1:01: {2.0}(D17,D26)]	*NOT available in DP
10	64.0000	PC			DIODE;ZMM08V2;SMD1206;SMD	[P0AAP:06: {16.0}(D38-D39,D44-D45,D50-D51,D56-D57,D62-D63,D68-D69,D74-D75,D80-D81)]	*NOT available in DP
11	1.0000	PC			DIODE;ZMM09V1;SMD1206	[1:01: {1.0}(D14)]	*NOT available in DP
12	64.0000	PC			DIODE;ZMM12V0;SMD1206	[P0AAP:06: {16.0}(D4-D19)]	*NOT available in DP
13	3.0000	PC			DIODE;ZMM18V0;SMD1206	[1:01: {3.0}(D20-D21,D33)]	*NOT available in DP
14	1.0000	PC			DIODE;ZMM24V0;SMD1206	[1:01: {1.0}(D32)]	*NOT available in DP
15	1.0000	PC			DIODE;RECTIFIER;600 V;DO201AD;3A;ER306	[1:01: {1.0}(D3)]	*NOT available in DP
16	3.0000	PC			DIODE;RECTIFIER;40 V;FM5822;DO-214AB;SMD	[P0B1S:06: {1.0}(D1)]	*NOT available in DP
17	1.0000	PC			DIODE;RECTIFIER;DUAL;ULTRAFAST;10A;200V;STTH1002CFP;TO-220FPAB	[1:01: {1.0}(D6)]	*NOT available in DP
18	1.0000	PC			DIODE;RECTIFIER;45 V;TO220;POWER SR;2*10A;45V;MBR2045FCT;TO220F	[1:01: {1.0}(D10)]	*NOT available in DP
19	2.0000	PC			DUAL RECTIFIER;TO220;MBR20200FCT	[1:01: {2.0}(D7,D9)]	*NOT available in DP
20	1.0000	PC			DIODE;ES3D;DO-214AB;SMD	[1:01: {1.0}(D34)]	*NOT available in DP
21	2.0000	PC			DIODE;5 V;RCLAMP0502B;SOT-523	[P0AAQ:16: {2.0}(D1-D2)]	*NOT available in DP
22	4.0000	PC			DIODE;SUPERFAST;ES1D;200V;1A;15NS;DO-214AC;SMD	[1:01: {4.0}(D25,D29-D31)]	*NOT available in DP
23	1.0000	PC	X80-00000-12035	H80-00000-12035	RECTIFIER, BRIDGE;800 V;GBU;GBU8K;8A	[1:01: {1.0}(D1)]	

Display

	Quantity	Unit	S.Sku	M.Sku	Description	Reference Designators	Notes
1	29.0000	PC	S25-00000-17804	C25-00000-17804	DISPLAY;LCD;CABLE:23mm;DOT:128*64;28PIN;17.9x10.86mm		
2	1.0000	PC	S25-00000-23108	C25-00000-23108	DISPLAY;LCD;AT070TN83V.1		

Hardware

	Quantity	Unit	S.Sku	M.Sku	Description	Reference Designators	Notes
1	2.0000	PC			CABLE TIE;25 MM;GREY;RIBBON CABLE CLAMP;PVC;3M4945 ADHESIVE;WIDTH:0.5"		*NOT available in DP
2	17.0000	PC			CABLE TIE;NYLON;4in;COLOR:		*NOT available in DP
3	5.0000	PC			WIRECLAMP;LUG;3mm;LENGTH:52mm;OUTER DIA;7mm5;PLASTIC COVERED STEEL;COLOR:BLK		*NOT available in DP
4	1.8000	G			THERM-GREASE;COLOR:WHT;SPEC.NO:09286		*NOT available in DP
5	0.5000	G			SCREWLOCK;SPEC.NO:01090		*NOT available in DP
6	14.0000	PC			NUT;M;3 MM;3.2 MM;HEX WASHER;7.3 MM;ZINC;BLUE;HEXAGON REC.;0.5 MM;M3*0.5mm NUT WITH TEETH EXTERNAL WASHER		*NOT available in DP
7	1.0000	PC			HEX. NUT;INNER DIA;M4mm;SURFACE:ZINC		*NOT available in DP
8	14.0000	PC			HEX. NUT;FOR JACK;M 3/8in;HEXWRENCH:11mm;THICKNESS:2mm;SURFACE:NICKEL/SLV		*NOT available in DP
9	2.0000	PC			OCT. NUT;FOR JACK;3/8in;OCTWRENCH:14.5mm;THICKNESS:3.5mm;SURFACE:NICKEL/SILVER		*NOT available in DP
10	1.0000	PC	V87-00200-10103	F87-00200-10103	RUBBER BUSHING;I00172P;DST.NO:002;DPT.NO:10103;(I00172P-RUBBER_BUSHING-REVB.dwf)		
11	1.0000	PC			SCREW;M;3 MM;15 MM;PAN WASHER;ZINC;BLUE/WHITE;PHILIPS REC.;0.5 MM;M3mm*15mm;HEAD:PAN&SPRING WASHER;BLUE/ZINC		*NOT available in DP
12	16.0000	PC			SCREW;M;3 MM;5 MM;BINDING;6 MM;ZINC;BLACK;PHILIPS REC.;0.5 MM;M3mm*5mm;HEAD:BINDING;INSERT:PHILIPS REC,H		*NOT available in DP
13	62.0000	PC			SCREW;M;3 MM;8 MM;PAN WASHER;5 MM;SILVER/ZINC;PHILIPS REC.;0.5 MM;M03mm*08mm; PAN SPRING WASHER;:PHILIPS REC;H		*NOT available in DP
14	124.0000	PC			SCREW;M;3 MM;6 MM;PAN WASHER;5 MM;SILVER/ZINC;PHILIPS REC.;0.5 MM;M03mm*06mm; PAN SPRING WASHER;:PHILIPS REC;H		*NOT available in DP
15	50.0000	PC			SCREW;M2mm*2mm;HEAD:PAN;INSERT:PHILIPS REC.;SURFACE:BLACK/ZINC		*NOT available in DP
16	1.0000	PC			SCREW;M3mm*6mm;HEAD:PAN SPRING WASHER;INSERT:PHILIPS REC.;SURFACE:SILVER/NIC	[1:01: {1.0}(M11)]	*NOT available in DP
17	10.0000	PC			SCREW;M3mm*8mm;HEAD:PAN SPRING WASHER;INSERT:PHILIPS REC.;SURFACE:SILVER/NIC	[1:01: {10.0}(M1-M10)]	*NOT available in DP
18	25.0000	PC			SCREW;M3mm*4mm;HEAD:PAN;INSERT:PHILIPS REC.;SURFACE:BLACK/ZINC		*NOT available in DP
19	20.0000	PC			SCREW;BT3mm*6mm;HEAD:PAN;INSERT:PHILLIPS REC.;SURFACE:BLACK/ZINC		*NOT available in DP
20	2.0000	PC			SCREW;M3mm*6mm;HEAD:TRUSS;INSERT:PHILIPS REC.;SURFACE:BLACK/ZINC		*NOT available in DP
21	8.0000	PC			SCREW;M3mm*6mm;PITCH:0mm5;HEAD:FLAT;DIA:5mm2;INSERT:PHILIPS REC.;SURFACE:BLACK/ZINC		*NOT available in DP
22	107.0000	PC			SCREW;A3mm*8mm;HEAD:PAN;INSERT:PHILIPS REC.;SURFACE:BLACK/ZINC		*NOT available in DP
23	4.0000	PC			SCREW;BT3mm*8mm;HEAD:PAN;INSERT:PHILLIPS REC.;SURFACE:BLACK/ZINC		*NOT available in DP
24	11.0000	PC			SCREW;M4mm*8mm;HEAD:PAN;INSERT:PHILIPS REC.;SURFACE:BLACK/ZINC		*NOT available in DP
25	5.0000	PC			SCREW;M4mm*12mm;HEAD:PAN WASHER DIA 9mm;INSERT:PHILIPS REC.;SURFACE:BLACK/ZINC		*NOT available in DP
26	4.0000	PC			SCREW;M4mm*30mm;HEAD:PAN;INSERT:PHILIPS REC.;SURFACE:BLACK/ZINC		*NOT available in DP
27	1.0000	PC			SHIELD;XLR MALE;DWG.NO:13436;(R14-SRC2000-XLRSHIELDMALE-REVG.DWG)	[P0B1S:10: {1.0}(X5)]	*NOT available in DP
28	1.0000	PC			SHIELD;XLR FEMALE;DWG.NO:13437;(R14-SRC2000-XLRSHIELDFEMALE-REVG.DWG)	[P0B1S:10: {1.0}(X2)]	*NOT available in DP
29	1.0000	PC			SILICA GEL;MASS;30g;SPEC.NO:30QB-BB2001-4		*NOT available in DP

	Quantity	Unit	S.Sku	M.Sku	Description	Reference Designators	Notes
30	10.0000	PC			STUD;M3x37.45 MM;HEX;0.7 MM;P0AAQ-IOPCB-STUD-REVA		*NOT available in DP
31	25.0000	PC			STUD;M;HEX;P0ASF-FADER-STUD		*NOT available in DP
32	1.0000	PC			STUD;BRASS;STUD, THROUGH HOLE,DIA 3MM5,LENGTH 7MM4,		*NOT available in DP
33	9.0000	PC			STUD;M;7.9 MM;0.5 MM;P0AAP-FADER-STUD		*NOT available in DP
34	1.0000	PC			STUD;M;DIA:3 MM;LEN:7.1 MM;HEX;OD:5 MM;PITCH:0.5 MM;X32V2-MASTER-FADER-STUD		*NOT available in DP
35	1.0000	PC			STUD;THREAD-DIA;3mm;LENGTH:13mm5;INT/INT		*NOT available in DP
36	49.0000	PC			STUD;THREAD-DIA;3mm;LENGTH:13mm8;INT/INT		*NOT available in DP
37	0.0280	M			SHRINKING TUBE;12 MM;BLACK;HIGH TEMPERATURE,Dia. 12mm;150C		*NOT available in DP
38	0.3100	M			SHRINKING TUBE;INNER DIA;1mm;SPEC.NO:43217		*NOT available in DP
39	30.0000	MM			SHRINKING TUBE;INNER DIA;2MM;SPEC NO:15747		*NOT available in DP
40	0.0540	M			SHRINKING TUBE;INNER DIA;3mm;SPEC.NO:01097		*NOT available in DP
41	0.0840	M			SHRINKING TUBE;INNER DIA;4mm;SPEC.NO:01098		*NOT available in DP
42	0.0800	M			SHRINKING TUBE;INNER DIA;6mm;SPEC.NO:01099		*NOT available in DP
43	0.0200	M			SHRINKING TUBE;INNER DIA;14mm;SPEC.NO:01100		*NOT available in DP
44	2.0000	PC			WASHER;9.7 MM;16 MM;NICKEL;WHITE;WASHER;FLAT;DIM:9.7*16*0.5mm;NIC		*NOT available in DP
45	1.0000	PC			WASHER;PLAIN;INNER DIA:3mm;OUTER DIA:6mm;THICKNESS;0mm5		*NOT available in DP
46	1.0000	PC			WASHER;PLAIN;INNER DIA:4mm;OUTER DIA:10mm;THICKNESS;1mm;PLATING;NICKEL		*NOT available in DP
47	14.0000	PC			WASHER;PLAIN;INNER DIA:9mm6;OUTER DIA:13mm;THICKNESS;0mm5;PLATING:NICKEL		*NOT available in DP
48	1.0000	PC			WASHER;SPRING;INNER DIA:4mm;OUTER DIA:7mm;THICKNESS;1mm7		*NOT available in DP
49	1.0000	PC			WASHER;EXTERNAL TEETH;INNER DIA:4mm;OUTER DIA:7mm;THICKNESS;1mm7		*NOT available in DP
50	0.0510	M	V97-00000-23179	F97-00000-23179	OTHER;GROMMET STRIP;1.5MM PANEL THICKNESS		
51	1.0000	PC	V97-00000-54455	F97-00000-54455	FOAM SHEET;P0AAQ-CONDUCTIVE-FOAM1.REVA		
52	2.0000	PC	V97-00000-54456	F97-00000-54456	FOAM SHEET;P0AAQ-CONDUCTIVE-FOAM2.REVA		
53	2.0000	PC	V97-00000-83715	F97-00000-83715	FOAM SHEET;P0AWP-CONDUCTIVE_SPONGE;REVA		
54	70.0000	PC			SCREW;M3mm*5mm;PITCH:0mm5;HEAD:FLAT;DIA:4mm5;INSERT:PHILIPS REC.;SURFACE:BLACK/ZINC		*NOT available in DP

Ic

	Quantity	Unit	S.Sku	M.Sku	Description	Reference Designators	Notes
1	4.0000	PC	S60-00000-10781	C60-00000-10781	IC;AD/DA;LQFP;48;CS5368-CQZ	[P0AAP:06: {1.0}(IC6)]	
2	1.0000	PC	S60-00000-18248	C60-00000-18248	IC;AD/DA;52;CS42438;MQFP;SMD	[P0AAQ:15: {1.0}(IC10)]	
3	2.0000	PC	S60-00000-21615	C60-00000-21615	IC;AD/DA;LQFP;48;D/A CONVERTER;CS4385-CQZ	[P0AAQ:20: {1.0}(IC6)]	
4	3.0000	PC	S60-56154-30520	C60-56154-30520	IC;CONVERTER;TLC1543CDW;SO20	[P0B1S:06: {1.0}(IC6)]	
5	115.0000	PC		C73-00000-29050	IC;OPAMP;SMD;SOP;8;BA4580RF	[P0AAQ:04: {3.0}(IC1-IC3)]	
6	5.0000	PC	S73-58007-40514	C73-31007-40514	IC;OPAMP OPAMP;TL074;SOP;	[P0AAQ:15: {5.0}(IC11,IC14,IC16,IC21,IC24)]	
7	1.0000	PC	S73-55035-80508	C73-55035-80508	IC;OPAMP OPAMP;LM358;SOP 8D	[1:01: {1.0}(IC13)]	
8	2.0000	PC		C73-59458-00408	IC;OPAMP OPAMP;NJM4580L;SIP	[P0B1S:11: {2.0}(IC3-IC4)]	
9	1.0000	PC	S74-00000-21794	C74-00000-21794	IC;POWER-CONVERSION;SO;8;PFC CONTROLLER;L6562D	[1:01: {1.0}(IC7)]	
10	1.0000	PC	S74-00000-29659	C74-00000-29659	IC;POWER-CONVERSION;SOIC;8;UC3844D8	[1:01: {1.0}(IC6)]	
11	2.0000	PC	S74-00000-29817	C74-00000-29817	IC;POWER-CONVERSION;AIC2354GV5;SOT-23-5;SMD	[P0AZP:00: {1.0}(IC1)]	
12	1.0000	PC	S74-55031-70703	C74-55031-70703	IC;VOLT.REGULATOR;LM317T;TO220	[1:01: {1.0}(IC4)]	
13	3.0000	PC	S74-66159-10508	C74-66159-10508	IC;CONVERTER;MP1591DS;SO8/150;SMD	[P0B1S:06: {1.0}(IC1)]	
14	1.0000	PC	S77-00000-18293	C77-00000-18293	IC;VOLT.REGULATOR;DC to DC;32;ADP2114ACPZ-R7;CP-32-2;SMD	[P0AAQ:15: {1.0}(IC7)]	
15	1.0000	PC	S77-00000-21793	C77-00000-21793	IC;VOLT.REGULATOR;TO220;5;LM2576T-ADJG	[1:01: {1.0}(IC3)]	
16	5.0000	PC	S77-00128-03000	C77-00128-03000	IC;VOLT.REGULATOR;ZENERSHUNT.REGULATOR;SOT23;LM431ACM3/N1	[1:01: {5.0}(IC8-IC12)]	
17	15.0000	PC	S77-00128-03001	C77-00128-03001	IC;VOLT.REGULATOR;ADJUSTABLE;SOT223;NCP1117STAT3;SMD	[P0AAQ:15: {1.0}(IC1)]	
18	1.0000	PC	S77-00155-03001	C77-00155-03001	IC;VOLT.REGULATOR;ADJUSTABLE;DPAK;NCP1117DTARKG;SMD	[P0AZP:00: {1.0}(IC6)]	
19	6.0000	PC	S77-03128-03001	C77-03128-03001	IC;VOLT.REGULATOR;NCP1117ST33T3;SOT223	[P0AAQ:15: {1.0}(IC2)]	
20	1.0000	PC	S77-18128-03001	C77-18128-03001	VOLT.REGULATOR;AZ1117H-1.8TRE1;SOT223;SMD	[P0AAQ:16: {1.0}(IC6)]	
21	1.0000	PC	S78-55039-32208	C78-55039-32208	IC;COMPARATOR;LM393;SOIC	[1:01: {1.0}(IC5)]	
22	1.0000	PC	T10-00000-18827	D10-00000-18827	IC;ASIC;MSOP;10;CS2000CP-CZZR	[P0AAQ:15: {1.0}(IC13)]	
23	1.0000	PC		D10-00000-78020	IC;ASIC;124;SMD;XS1-L16A-128-QF124-C10	[P0AZP:00: {1.0}(IC48)]	
24	1.0000	PC	T10-00000-78031	D10-00000-78031	IC;USB Transceiver;QFN;32;SMD;USB3340	[P0AZP:00: {1.0}(IC3)]	
25	4.0000	PC	T12-00000-12043	D12-00000-12043	IC;DIG COMM.;SOIC;8;MLVDS TRANSCEIVER;SMD;SN65MLVD204AD	[P0AAQ:15: {4.0}(IC17-IC18,IC22-IC23)]	REPLACED: C73-58007-40514
26	3.0000	PC	T12-00000-18249	D12-00000-18249	IC;DIG COMM.;QFN;24;SMD;LAN8720A-CP	[P0AAQ:15: {2.0}(IC19-IC20)]	
27	2.0000	PC	T17-00001-16874	D17-00001-16874	IC;SDRAM;SMD;TSOP;PINS:54;TAPE AND REEL;MT48LC8M16A2P-6A:L	[P0AAQ:15: {2.0}(IC3-IC4)]	
28	2.0000	PC	T18-00000-18247	D18-00000-18247	IC;DSP;LQFP;208;ADSP-21371KSWZ-2B;SMD	[P0AAQ:15: {2.0}(IC5-IC6)]	
29	5.0000	PC	T19-00037-04631	D19-00037-04631	IC;FLASH;STM32F103RBT6;LQFP64;32-Bit MCU with Flash Memory	[P0B1S:06: {1.0}(IC5)]	
30	1.0000	PC	T19-00074-05121	D19-00074-05121	IC;FLASH MEMORY;W25X40CLSNIG;SMD;SOIC-8	[: {1.0}(IC67)]	
31	1.0000	PC	T22-00000-18232	D22-00000-18232	IC;LOGIC;5;74LVC1G07GV;SOT753;SMD	[P0AAQ:15: {1.0}(IC26)]	
32	1.0000	PC	T22-00000-78023	D22-00000-78023	IC;LOGIC;BUFFER;SC70-6;SMD;NC7WZ07P6X	[P0AZP:00: {1.0}(IC8)]	
33	6.0000	PC	T22-27010-82805	D22-27010-82805	IC;LOGIC;74LVC1G08;SOT-23;5PIN;SMD	[P0AAP:06: {1.0}(IC7)]	
34	1.0000	PC	T22-27020-42806	D22-27020-42806	IC;INVERTER;74LVC2G04;SOP	[P0B1S:08: {1.0}(IC5)]	
35	7.0000	PC	T22-27024-50520	D22-27024-50520	IC;LOGIC;74LVC245;SOP	[P0AAQ:15: {1.0}(IC15)]	
36	28.0000	PC	T22-31016-50516	D22-31016-50516	IC;LOGIC;74HC165;SOP	[P0B1S:06: {4.0}(IC7-IC10)]	
37	6.0000	PC	T22-32027-30520	D22-32027-30520	IC;LOGIC;74HCT273;SOP	[P0B1S:06: {2.0}(IC3-IC4)]	
38	138.0000	PC	T22-32059-50520	D22-32059-50520	IC;LOGIC;74HCT595;SOP	[P0AAP:06: {9.0}(IC8-IC16)]	
39	7.0000	PC	T24-18081-61832	D24-18081-61832	IC;MICROCONTROLLER;ATMEGA8A-AU;SMD;TQFP32	[: {1.0}(IC7)]	
40	2.0000	PC	T24-48030-02803	D24-48030-02803	IC;MICROCONTROLLER;MAX809STRG;Vth:2.93V;SOT	[P0AZP:00: {1.0}(IC5)]	
41	1.0000	PC	T28-54534-00616	D28-54534-00616	IC;CONVERTER A/D CONVERTER;CS5340-CZZ;TSSOP	[P0AAQ:15: {1.0}(IC9)]	
42	1.0000	PC	T29-00000-18234	D29-00000-18234	IC;SRAM;SOIC;8;ISL1208IB8Z;SMD	[P0AAQ:16: {1.0}(IC2)]	
43	1.0000	PC	T29-00000-29818	D29-00000-29818	IC;SRAM;60;IS43LR16320B-6BL;BGA;SMD	[P0AAQ:16: {1.0}(IC1)]	

	Quantity	Unit	S.Sku	M.Sku	Description	Reference Designators	Notes
44	64.0000	PC	T30-00000-61526	D30-00000-61526	IC;SWITCH/MUPLEX;SMD;SOIC;16;V411	[P0AAP:06: {16.0}(IC29-IC44)]	
45	1.0000	PC	T30-02206-52208	D30-02206-52208	IC;SWITCH/MUPLEX;POWER DISTRIBUTION SWITCH;1A;SOIC;TPS2065D	[P0AAQ:16: {1.0}(IC5)]	
46	1.0000	PC	T32-00000-18409	D32-00000-18409	IC;EPROM;PROGM;BGA;256;XC3S1400A-4FTG256C;SMD	[P0AAQ:15: {1.0}(IC12)]	
47	1.0000	PC	T33-00000-29831	D33-00000-29831	IC;MICROCONTROLLER, PROGRAMMED;MCIMX253DJM4A;17X17 MAPBGA-400;SMD	[P0AAQ:16: {1.0}(IC3)]	
48	1.0000	PC		D33-00001-16252	IC;MICROCONTROLLER, PROGRAMMED;MICROCONTROLLER;W25X40CL;X-USB V010	[P0AZP:00: {1.0}(IC67)]	
49	1.0000	PC		D33-00001-16254	IC;MICROCONTROLLER, PROGRAMMED;FIRMWARE ATMEGA8A-AU;X-USB V3	[P0AZP:00: {1.0}(IC7)]	
50	1.0000	PC		D33-00001-23668	IC;MICROCONTROLLER, PROGRAMMED;EPROM DATA;SD-Card Image Build;V2.10 and V2.11		
51	4.0000	PC	T12-00000-12043	D12-00000-12043	IC;DIG COMM.;SOIC;8;MLVDS TRANSCEIVER;SMD;SN65MLVD204AD	[P0AAQ:15: {4.0}(IC17-IC18,IC22-IC23)]	(EU, UL, UK, SAA, BR, AR, HM)

Led

	Quantity	Unit	S.Sku	M.Sku	Description	Reference Designators	Notes
1	1.0000	PC		E10-00000-13289	LED HIB;3mm0 ROUND;RED;Len: White Diffuse; Head BASE: 4.5X5.08	[P0AZP:00: {1.0}(LD1)]	
2	238.0000	PC		E10-00000-19576	LED HIB;TRANSPARENT AMBER;SMD603	[P0B1S:13: {56.0}(LD21-LD76)]	
3	48.0000	PC	U10-00000-39409	E10-00000-39409	LED HIB;GREEN;SMD603	[P0B1S:06: {16.0}(LD45-LD60)]	
4	20.0000	PC	U10-00000-39410	E10-00000-39410	LED HIB;WHITE;SMD603	[P0B1S:09: {20.0}(LD1-LD4,LD6-LD7,LD13,LD17,LD29,LD33,LD48-LD49,LD64,LD68,LD80,LD84,LD96,LD100,LD106-LD107)]	
5	29.0000	PC	U10-00000-39412	E10-00000-39412	LED HIB;GREEN;SMD805	[P0B1S:06: {11.0}(LD2-LD4,LD102-LD109)]	
6	103.0000	PC	U10-00000-39413	E10-00000-39413	LED HIB;RED;SMD805	[P0B1S:06: {25.0}(LD5-LD12,LD37-LD44,LD85-LD92,LD101)]	
7	32.0000	PC		E10-00000-47170	LED;RED;LEN:RED;DIFFUSE;HB;3MM ROUND;ANGLE;BASE:4.5X5.08X6	[P0AAQ:19: {8.0}(LD1-LD8)]	
8	62.0000	PC		E10-00000-79125	LED HIB;WAVELENGTH:586-596nm;TRANSPARENT AMBER;SMD805	[P0B1S:06: {9.0}(LD1,LD29-LD36)]	
9	3.0000	PC	U10-09590-02370	E10-09590-02370	LED;SMD;WAVELENGTH:465nm;COLOR:YELLOW;REFLECTOR:WATER CLEAR;(LIGITEK LG-192VY-CT)	[P0AAQ:15: {3.0}(LD1-LD3)]	
10	45.0000	PC		E14-00000-33404	LED SUB;GREEN;SMD603;WATER CLEAR	[P0B1S:03: {2.0}(LD147,LD150)]	
11	156.0000	PC	U14-00000-33405	E14-00000-33405	LED SUB;AMBER;SMD603;WATER CLEAR	[P0B1S:06: {32.0}(LD61-LD84,LD93-LD100)]	
12	29.0000	PC	U15-00000-40123	E15-00000-40123	LED HIB;BLUE/GREEN/RED;SMD3.5X2.8	[P0B1S:06: {8.0}(LD21-LD28)]	

Metal Part

	Quantity	Unit	S.Sku	M.Sku	Description	Reference Designators	Notes
1	1.0000	PC		A62-00000-58228	METAL;P0AAQ;TIN PLATE T=0.3mm;SHIELD;BENDING + PUNCHING		
2	1.0000	PC		A62-00000-70548	METAL;PANEL;P0AAQ;SECC 1.2mm;BENDING + PUNCHING;P0AAQ-SIDE_RIGHT-REVB		
3	1.0000	PC		A62-00000-70549	METAL;PANEL;P0AAQ;SECC 1.2mm;BENDING + PUNCHING;P0AAQ-SIDE_LEFT-REV B		
4	1.0000	PC		A63-00000-12034	METAL;P0A1W;AL A6063;HEATSINK;EXTRUSION;OXIDIZING;NATURAL;SMALL HEATSINK,P0A1W;REV:B	[1:01: {1.0}(HS3)]	
5	1.0000	PC		A63-00000-30059	METAL;P0AAQ;ALUMINIUM;HEATSINK;BLANKING + PUNCHING + BENDING;P0AAQ-HEATSINK-L-REVA	[1:01: {1.0}(HS2)]	
6	1.0000	PC		A63-00000-30060	METAL;P0AAQ;ALUMINIUM;HEATSINK;BLANKING + PUNCHING + BENDING;P0AAQ-HEATSINK-R-REVA	[1:01: {1.0}(HS1)]	
7	2.0000	PC	Q65-00000-06911	A65-00000-06911	METAL;P0ACL;SUS 201;MACHINING;DRAW_PULL;REV:A		
8	3.0000	PC	Q65-00000-24959	A65-00000-24959	METAL;P0274;SPCC 0.8mm;MOUNT;BENDING + PUNCHING;PLATING TIN;MOUNTING HELP;I00053P;REV:B	[P0AZP:00: {3.0}(M1-M3)]	
9	1.0000	PC		A65-00000-25002	METAL;P0AAQ;SECC 1.0mm;SHIELD;BENDING + PUNCHING;NATURAL;P0AAQ-SHIELD_EMI-REVA		
10	1.0000	PC		A65-00000-25218	METAL;P0AAQ;SECC 1.0mm;MOUNT;BENDING + PUNCHING;NATURAL;P0AAQ-DISPLAY_MOUNT-REVA		
11	1.0000	PC		A65-00000-30074	METAL;P0AAQ;SECC 0.8mm;SHIELD;BLANKING + BENDING;P0AAQ-PSU-SHIELD-REVA		
12	3.0000	PC	Q65-00000-37710	A65-00000-37710	METAL;P0AAQ;SECC 2.0mm;HOLDER;BENDING + PUNCHING;P0AAQ-FADER-BRACKET-RAIL-REVA		
13	1.0000	PC		A65-00000-65022	METAL;P0AAQ;SECC 1.0mm;HOLDER;BENDING + PUNCHING;NATURAL;P0AAQ-VENT-SHIELD-REVB		
14	25.0000	PC		A65-00000-68537	METAL;P0AAQ;SECC 0.8mm;BRACKET;BENDING + PUNCHING;P0AAQ-BRACKET_FADER-REVC		
15	3.0000	PC		A65-00000-71075	METAL;RAIL;P0AAP;SECC 2.0mm;PUNCHING AND BENDING;P0AAP-FADER-BRACKET-RAIL-TOP		
16	1.0000	PC		A65-00000-79532	METAL;BAR;P0AAP;SECC 0.8mm;BLANKING + PUNCHING + BENDING;LCD-GROUNDING-BAR-LEFT-REVB		
17	1.0000	PC		A65-00000-79533	METAL;BAR;P0AAP;SECC 0.8mm;BLANKING + PUNCHING + BENDING;LCD-GROUNDING-BAR-RIGHT-REVB		
18	1.0000	PC		A65-00000-84015	METAL;CAGE;P0AAP;SECC 1.0mm;BLANKING + PUNCHING + BENDING;P0AAP-PLUGIN-CARD-CAGE-REVA		
19	1.0000	PC		A65-00000-85264	METAL;HOLDER;P0B1S;SECC 1.2mm;BLANKING + PUNCHING + BENDING;X32-SUPPORTER-REVA		
20	1.0000	PC		A65-00000-96512	METAL;FRONT;P0AAQ;MATERIAL:AL 6063 T5;MEDIUM GLOSS;EXTRUSION;POWDER COATING;450;P0AAQ-ARMREST-REVC		
21	1.0000	PC	Z00-00000-84315	J00-00000-84315	METAL;PANEL;P0AZP;SECC 1.2mm;BLANKING + PUNCHING;PAINTING NORMAL;8403;COVER;A001		
22	1.0000	PC		J02-00000-88974	METAL;PANEL;P0B1S;MATERIAL:SECC 1.2mm;BENDING + PUNCHING;PAINTING NORMAL;DARK GRAY METALLIC;BOTTOM CASE;A001		
23	1.0000	PC	Z05-00000-88972	J05-00000-88972	METAL;PANEL;P0B1S;MATERIAL:SECC 1.2mm;BLANKING + PUNCHING + BENDING;SPRAYING;DARK GRAY METALLIC;TOP;A001		

Plastic Part

	Quantity	Unit	S.Sku	M.Sku	Description	Reference Designators	Notes
1	5.0000	PC	W51-00100-14745	G51-00100-14745	PLASTIC;RUBFOOT;P0738;DST.NO:001;DPT.NO:14745;(P0738-RUBFOOT-REVA.DWG)		
2	6.0000	PC	W52-00000-31661	G52-00000-31661	PLASTIC;P0AAQ;ABS;KNOB;BLACK;P0AAQ-KNOB-DISPLAY-REVA		
3	17.0000	PC	W52-00000-35743	G52-00000-35743	PLASTIC;P0AAQ;ABS;KNOB;TRANSPARENT;BLACK;P0AAQ-LED-COLLAR-KNOB-REVA		
4	3.0000	PC	W52-00000-35745	G52-00000-35745	PLASTIC;P0AAQ;KNOB;2-SHOT INJECTION MOULDING;BLACK;GREY;P0AAQ-KNOB-MONITOR-REVA		
5	25.0000	PC	W52-00000-58519	G52-00000-58802	PLASTIC;P0AAQ;ABS;KNOB;ANODIZING CHROME(III);CHROME;P0AAQ-FADER-KNOB-NEW		
6	1.0000	PC		G52-00000-85803	PLASTIC;BUTTON;P0B1S;RUBBER;P0B1S-DISPLAY-RUBBER-8-REVA		
7	2.0000	PC		G52-00000-85804	PLASTIC;BUTTON;P0B1S;RUBBER;P0B1S-DISPLAY-RUBBER-4-REVA		
8	5.0000	PC		G53-00000-17755	PLASTIC;P0AAQ;ABS;HOLDER;INJECTION MOULDING;BLACK;P0AAQ-LCD_HOLDER_SINGLE-REVA		
9	3.0000	PC	W53-00000-17757	G53-00000-17757	PLASTIC;P0AAQ;ABS;HOLDER;INJECTION MOULDING;BLACK;P0AAQ-LCD_HOLDER_CHANNEL8-REVA		
10	1.0000	PC	W53-00000-25130	G53-00000-25130	PLASTIC;P0AAQ;ABS;SIDE;INJECTION MOULDING;MATT;PAINTING NORMAL;BLACK;P0AAQ-SIDE_CAP_LEFT-REVA		
11	1.0000	PC	W53-00000-25132	G53-00000-25132	PLASTIC;P0AAQ;ABS;SIDE;INJECTION MOULDING;GLOSS HIGH;PAINTING NORMAL;BLACK;P0AAQ-SIDE_CAP_RIGHT-REVA		
12	1.0000	PC	W53-00000-35748	G53-00000-35748	PLASTIC;P0AAQ;ABS;HOLDER;BLACK;P0AAQ-LED_METER_EQ-REVA		
13	2.0000	PC	W53-00000-35749	G53-00000-35749	PLASTIC;P0AAQ;ABS;HOLDER;BLACK;P0AAQ-LED_METER_SINGLE-REVA		
14	1.0000	PC		G53-00000-37711	PLASTIC;P0AAQ;SILICON RUBBER;PAD;BLACK MATT;P0AAQ-PHONE-BAY-RUBBER-REVA		
15	1.0000	PC		G53-00000-37712	PLASTIC;P0AAQ;ABS;HOLDER;INJECTION MOULDING;MATTE;PAINTING NORMALBLACK;P0AAQ-PHONE-BAY-REVA		
16	25.0000	PC	W53-00000-56330	G53-00000-56330	PLASTIC;P0AAQ;POM (Polyoxymethylene);WHEEL;INJECTION;GLOSS HIGH;BLACK;P0AAQ-WHEEL-REVA		
17	25.0000	PC		G53-00000-58726	PLASTIC;P0AAQ;RACK;INJECTION;P0AAQ-FADER-BELT		
18	3.0000	PC		G53-00000-59100	PLASTIC;P0AAQ;PC (Polycarbonate);HOLDER;2-SHOT INJECTION MOULDING;BLACK;TRANSPARENT;P0AAQ-LED-METER_DISPLEY REVB		
19	9.0000	PC		G53-00000-70623	PLASTIC;HOUSING;P0AAP;ABS;INJECTION;GLOSS HIGH;BLACK;P0AAP-BUTTON-HOUSING-H8-REVA		
20	1.0000	PC		G53-00000-70624	PLASTIC;HOUSING;P0AAP;ABS ;INJECTION;GLOSS HIGH;BLACK;P0AAP-BUTTON-HOUSING-2X3-REVA		
21	2.0000	PC		G53-00000-70626	PLASTIC;HOUSING;P0AAP;ABS;INJECTION;GLOSS HIGH;BLACK;P0AAP-BUTTON-HOUSING-V4-REVA		
22	5.0000	PC		G53-00000-70634	PLASTIC;HOUSING;P0AAP;ABS;INJECTION;GLOSS HIGH;BLACK;P0AAP-BUTTON-HOUSING-SINGLE-REVA		
23	1.0000	PC		G53-00000-70645	PLASTIC;HOUSING;P0AWP;ABS;INJECTION;BLACK;P0AWP-SINGLEK_BUTTON_HOUSING;REVA		
24	27.0000	PC	W53-00000-77640	G53-00000-77640	PLASTIC;EPE;P0AAQ;ABS PC;1 and 2 SHOT INJECTION MOULDING;YS11001A;BLACK;TRANSPARENT;P0AAQ-LED_METER REV B		
25	2.0000	PC		G53-00000-81372	PLASTIC;BUTTON;P0AAP;SILICON RUBBER;RUBBER TOOLING;TRANSPARENT WHITE DIFFUSED;RUBBER-V4-REVA		
26	9.0000	PC		G53-00000-81373	PLASTIC;BUTTON;P0AAP;SILICON RUBBER;RUBBER TOOLING;TRANSPARENT WHITE DIFFUSED;RUBBER-H8-REVA		
27	5.0000	PC		G53-00000-81375	PLASTIC;BUTTON;P0AAP;SILICON RUBBER;RUBBER TOOLING;TRANSPARENT WHITE DIFFUSED;RUBBER-SINGLE-REVA		
28	1.0000	PC		G53-00000-81378	PLASTIC;BUTTON;P0AAP;SILICON RUBBER;RUBBER TOOLING;TRANSPARENT WHITE DIFFUSED;RUBBER-2X3-REVA		

	Quantity	Unit	S.Sku	M.Sku	Description	Reference Designators	Notes
29	1.0000	PC		G53-00000-85227	PLASTIC;BUTTON;P0B1S;RUBBER;PAINTING NORMAL;TRANSPARENT WHITE DIFFUSED;X32-RUBBER-B3-REVA		
30	1.0000	PC		G53-00000-85229	PLASTIC;BUTTON;P0B1S;RUBBER;PAINTING NORMAL;TRANSPARENT WHITE DIFFUSED;X32-RUBBER-B1-REVA		
31	1.0000	PC		G53-00000-85230	PLASTIC;BUTTON;P0B1S;RUBBER;PAINTING NORMAL;TRANSPARENT WHITE DIFFUSED;X32-RUBBER-B2S3-REVA		
32	1.0000	PC		G53-00000-85231	PLASTIC;BUTTON;P0B1S;RUBBER;PAINTING NORMAL;TRANSPARENT WHITE DIFFUSED;X32-RUBBER-B2X4-REVA		
33	1.0000	PC		G53-00000-85232	PLASTIC;BUTTON;P0B1S;RUBBER;PAINTING NORMAL;TRANSPARENT WHITE DIFFUSED;X32-RUBBER-S4-REVA		
34	1.0000	PC		G53-00000-85233	PLASTIC;BUTTON;P0B1S;RUBBER;PAINTING NORMAL;TRANSPARENT WHITE DIFFUSED;X32-RUBBER-B3S1-REVA		
35	1.0000	PC		G53-00000-85234	PLASTIC;BUTTON;P0B1S;RUBBER;PAINTING NORMAL;TRANSPARENT WHITE DIFFUSED;X32-RUBBER-B2S2-REVA		
36	2.0000	PC		G53-00000-85235	PLASTIC;BUTTON;P0B1S;RUBBER;PAINTING NORMAL;TRANSPARENT WHITE DIFFUSED;X32-RUBBER-B4S1-REVA		
37	1.0000	PC		G53-00000-85236	PLASTIC;BUTTON;P0B1S;RUBBER;MOULDING;PAINTING NORMAL;TRANSPARENT WHITE DIFFUSED;X32-RUBBER-B1S1-REVA		
38	1.0000	PC		G53-00000-85237	PLASTIC;BUTTON;P0B1S;RUBBER;INJECTION;PAINTING (RUBBER);TRANSPARENT WHITE DIFFUSED;X32-RUBBER-B4S2-REVA		
39	1.0000	PC		G53-00000-85245	PLASTIC;HOUSING;P0B1S;ABS;INJECTION;GLOSS HIGH;BLACK;X32-HOUSING-B3-REVA		
40	1.0000	PC		G53-00000-85246	PLASTIC;HOUSING;P0B1S;ABS;INJECTION;GLOSS HIGH;BLACK;X32-HOUSING-B1-REVA		
41	1.0000	PC		G53-00000-85247	PLASTIC;HOUSING;P0B1S;ABS;INJECTION;GLOSS HIGH;BLACK;X32-HOUSING-B2S3-REVA		
42	1.0000	PC		G53-00000-85248	PLASTIC;HOUSING;P0B1S;ABS;INJECTION;GLOSS HIGH;BLACK;X32-HOUSING-B2X4-REVA		
43	1.0000	PC		G53-00000-85249	PLASTIC;HOUSING;P0B1S;ABS;INJECTION;GLOSS HIGH;BLACK;X32-HOUSING-S4-REVA		
44	1.0000	PC		G53-00000-85250	PLASTIC;HOUSING;P0B1S;ABS;INJECTION;GLOSS HIGH;BLACK;X32-HOUSING-B3S1-REVA		
45	1.0000	PC		G53-00000-85251	PLASTIC;HOUSING;P0B1S;ABS;INJECTION;GLOSS HIGH;BLACK;X32-HOUSING-B2S2-REVA		
46	2.0000	PC		G53-00000-85252	PLASTIC;HOUSING;P0B1S;ABS;INJECTION;GLOSS HIGH;BLACK;X32-HOUSING-B4S1-REVA		
47	1.0000	PC		G53-00000-85253	PLASTIC;HOUSING;P0B1S;ABS;INJECTION;GLOSS HIGH;BLACK;X32-HOUSING-B1S1-REVA		
48	1.0000	PC		G53-00000-85254	PLASTIC;HOUSING;P0B1S;ABS;INJECTION;GLOSS HIGH;BLACK;X32-HOUSING-B4S2-REVA		
49	1.0000	PC		G53-00000-85828	PLASTIC;BUTTON;P0AWP;SILICON RUBBER;RUBBER TOOLING;TRANSPARENT WHITE DIFFUSED;P0AWP-SINGLE_RUBBER_BUTTON;REVA		
50	17.0000	PC	W53-00000-97898	G53-00000-97898	PLASTIC;HOLDER;P0AAQ;ABS PC;2-SHOT INJECTION MOULDING;YS11001A;TRANSPARENT;BLACK;P0AAQ-LED-COLLAR-REVB		
51	25.0000	PC		G53-00001-04389	PLASTIC;WHEEL;P0AHW;POM (Polyoxymethylene);INJECTION;WHITE;GEAR		
52	25.0000	PC		G53-00001-17990	PLASTIC;HOLDER;P0AHW;POM (Polyoxymethylene);INJECTION;GEAR HOLDER REV.A		
53	29.0000	PC	W54-00000-37713	G54-00000-37713	PLASTIC;P0AAQ;ACRYLIC;LENS;P0AAQ-LCD-LENS-FLAT-REVA		
54	25.0000	PC	W58-00000-45211	G58-00000-45211	PLASTIC;P0246;NYLON 66(POLYAMIDE 66);FADER;INJECTION;BLACK;BELT HOLDER REV.D		
55	1.0000	PC		G58-00000-52835	PLASTIC;P0AAQ;ABS (VO);HOLDER;INJECTION;P0AAQ-Ferrite-holder-REVA		
56	1.0000	PC	W58-00000-70647	G58-00000-70647	PLASTIC;RING;P0AWP;ABS;P0AWP-USB-RING-REVA		
57	1.0000	PC	Y63-00000-49750	I63-00000-49750	PLASTIC;P0AAQ;PC (Polycarbonate);LENS;TRANSPARENT;P0AAQ-DISPLAY-OVERLAY-REVA		

	Quantity	Unit	S.Sku	M.Sku	Description	Reference Designators	Notes
58	1.0000	PC	Y63-00000-79512	I63-00000-79512	PLASTIC;CASE;P0AAP;ABS;INJECTION;SPRAYING;BLACK;DISPLAY-HOUSING-REVB		
59	1.0000	PC		I63-00000-86838	PLASTIC;BUTTON;P0B1S;PC;INJECTION;PAINTING NORMAL;BLACK MATT;TRANSPARENT;P0B1S-DISPLAY-BUTTON-HOME-REVA		
60	1.0000	PC		I63-00000-86846	PLASTIC;BUTTON;P0B1S;PC;INJECTION;PAINTING NORMAL;BLACK MATT;TRANSPARENT;P0B1S-DISPLAY-BUTTON-UTILITY-REVA		
61	1.0000	PC		I63-00000-86848	PLASTIC;BUTTON;P0B1S;PC;INJECTION;PAINTING NORMAL;BLACK MATT;TRANSPARENT;P0B1S-DISPLAY-BUTTON-METERS-REVA		
62	1.0000	PC		I63-00000-86850	PLASTIC;BUTTON;P0B1S;PC;INJECTION;PAINTING NORMAL;BLACK MATT;TRANSPARENT;P0B1S-DISPLAY-BUTTON-ROUTING-REVA		
63	1.0000	PC		I63-00000-86852	PLASTIC;BUTTON;P0B1S;PC;INJECTION;PAINTING NORMAL;BLACK MATT;TRANSPARENT;P0B1S-DISPLAY-BUTTON-SETUP-REVA		
64	1.0000	PC		I63-00000-86853	PLASTIC;BUTTON;P0B1S;PC;INJECTION;PAINTING NORMAL;BLACK MATT;TRANSPARENT;P0B1S-DISPLAY-BUTTON-LIBRARY-REVA		
65	1.0000	PC		I63-00000-86854	PLASTIC;BUTTON;P0B1S;PC;INJECTION;PAINTING NORMAL;BLACK MATT;TRANSPARENT;P0B1S-DISPLAY-BUTTON-EFFECT-REVA		
66	1.0000	PC		I63-00000-86855	PLASTIC;BUTTON;P0B1S;PC;INJECTION;PAINTING NORMAL;BLACK MATT;TRANSPARENT;P0B1S-DISPLAY-BUTTON-MUTEGRP-REVA		
67	4.0000	PC		I63-00000-86867	PLASTIC;BUTTON;P0B1S;PC;INJECTION;PAINTING NORMAL;BLACK MATT;TRANSPARENT;P0B1S-DISPLAY-BUTTON-PSLUD-REVA		

Plug Socket

	Quantity	Unit	S.Sku	M.Sku	Description	Reference Designators	Notes
1	16.0000	PC	W64-01211-03174	G64-01211-03174	PLUG;JACK STEREO 6mm3;STRAIGHT SOLDER;W/O MET.RNG.;MET.BUSH.;NO NUT/WASHER;(JY-6351G-02-250)	[P0AAQ:04: {12.0}(X1-X6,X8-X13)]	
2	1.0000	PC	W67-00000-17679	G67-00000-17679	SOCKET;;HOUSING;3;R-301SN-B09		
3	1.0000	PC	W68-34004-17323	G68-34004-17323	PLUG;RCA;SOCKET;RCAJACK4P/S;FEMALE;POLES:04;STRAIGHT	[P0AAQ:04: {1.0}(X7)]	
4	26.0000	PC		G71-00000-17674	WAFER;2P;ROWS:1;ANGLED;PITCH:2 MM;HY-2PAW	[P0B1S:06: {8.0}(X1-X8)]	
5	2.0000	PC		G71-00000-18295	PCB SOCKET;PIN SOCKET;HOUSING;24;ROWS:2;ANGLED;2 MM;SMD	[P0AAQ:15: {2.0}(X11,X16)]	
6	2.0000	PC		G71-00000-18297	PCB SOCKET;PIN SOCKET;HOUSING;32;ROWS:2;ANGLED;2 MM;SMD	[P0AAQ:15: {2.0}(X12,X17)]	
7	2.0000	PC		G71-00000-18401	PIN HEAD;24;ROWS:2;ANGLED;2 MM;DUAL SMD PIN HEADER	[P0AAQ:16: {2.0}(X3,X5)]	
8	2.0000	PC		G71-00000-18402	PIN HEAD;32;ROWS:2;ANGLED;2 MM;DUAL SMD PIN HEADER	[P0AAQ:16: {2.0}(X4,X6)]	
9	2.0000	PC		G71-00000-25923	WAFER;PCB WAFER;2;ROWS:1;ANGLED;7.92 MM;JS1120	[1:01: {1.0}(X3)]	
10	2.0000	PC		G71-23102-04756	WAFER;POLES:2;STRAIGHT;PITCH:2 mm;1 ROW;TYPE:A2006WV-2P	[1:01: {2.0}(X7,X11)]	
11	4.0000	PC		G71-23103-04757	WAFER;POLES:3;STRAIGHT;PITCH:2 mm;1 ROW;TYPE:A2006WV-3P	[P0AAQ:05: {1.0}(X5)]	
12	6.0000	PC	W71-23104-04758	G71-23104-04758	WAFER;POLES:4;STRAIGHT;PITCH:2 mm;1 ROW;TYPE:A2006WV-4P	[P0AAQ:15: {1.0}(X2)]	
13	3.0000	PC		G71-23105-04745	WAFER;POLES:5;STRAIGHT;PITCH:2 mm;1 ROW;TYPE:A2006WV-5P	[P0AAQ:15: {2.0}(X13,X19)]	
14	2.0000	PC		G71-23106-04965	WAFER;POLES:6;STRAIGHT;PITCH:2 mm;1 ROW;TYPE:A2006WV-6P	[P0B1S:06: {1.0}(X13)]	
15	2.0000	PC	W71-23108-04747	G71-23108-04747	WAFER;POLES:8;STRAIGHT;PITCH:2 mm;1 ROW;TYPE:A2006WV-8P	[P0B1S:07: {1.0}(X13)]	
16	1.0000	PC	W71-23110-04749	G71-23110-04749	WAFER;POLES:10;STRAIGHT;PITCH:2 mm;1 ROW;TYPE:A2006WV-10P	[1:01: {1.0}(X5)]	
17	7.0000	PC		G71-23112-04751	WAFER;POLES:12;STRAIGHT;PITCH:2 mm;1 ROW;TYPE:A2006WV-12P	[1:01: {6.0}(X4,X8,X12-X13,X15-X16)]	
18	2.0000	PC		G71-23113-04752	WAFER;POLES:13;STRAIGHT;PITCH:2 mm;1 ROW;TYPE:A2006WV-13P	[1:01: {1.0}(X9)]	
19	1.0000	PC		G71-23115-04754	WAFER;POLES:15;STRAIGHT;PITCH:2 mm;1 ROW;TYPE:A2006WV-15P	[P0B1S:11: {1.0}(X1)]	
20	1.0000	PC		G71-23116-04755	WAFER;POLES:16;STRAIGHT;PITCH:2 mm;1 ROW;TYPE:A2006WV-16P	[P0B1S:09: {1.0}(X4)]	
21	1.0000	PC		G71-27102-04450	WAFER;POLES:2;STRAIGHT;PITCH:3.96 mm;1 ROW;JS1120-03-S1;NO MIDDLE PIN	[2:02: {1.0}(X1)]	
22	26.0000	PC		G71-43102-05994	PLUG;HOUSING;POLES:2;ROWS:1;STRAIGHT;PITCH:2mm;TYP:A2008		
23	3.0000	PC		G71-43103-05995	PLUG;HOUSING;POLES:3;ROWS:1;STRAIGHT;PITCH:2mm;TYP:A2008		
24	6.0000	PC	W71-43104-05996	G71-43104-05996	PLUG;HOUSING;POLES:4;ROWS:1;STRAIGHT;PITCH:2mm;TYP:A2008		
25	2.0000	PC		G71-43105-05997	PLUG;HOUSING;POLES:5;ROWS:1;STRAIGHT;PITCH:2mm;TYP:A2008		
26	2.0000	PC		G71-43106-05998	PLUG;HOUSING;POLES:6;ROWS:1;STRAIGHT;PITCH:2mm;TYP:A2008		
27	2.0000	PC	W71-43108-06000	G71-43108-06000	PLUG;HOUSING;POLES:8;ROWS:1;STRAIGHT;PITCH:2mm;TYP:A2008		
28	1.0000	PC	W71-43110-06002	G71-43110-06002	PLUG;HOUSING;POLES:10;ROWS:1;STRAIGHT;PITCH:2mm;TYP:A2008		
29	7.0000	PC		G71-43112-06004	PLUG;HOUSING;POLES:12;ROWS:1;STRAIGHT;PITCH:2mm;TYP:A2008		
30	2.0000	PC		G71-43113-06005	PLUG;HOUSING;POLES:13;ROWS:1;STRAIGHT;PITCH:2mm;TYP:A2008		
31	1.0000	PC		G71-43115-06763	PLUG;HOUSING;POLES:15;ROWS:1;STRAIGHT;PITCH:2mm;TYP:A2008		
32	1.0000	PC		G71-43116-06764	PLUG;HOUSING;POLES:16;ROWS:1;STRAIGHT;PITCH:2mm;TYP:A2008		
33	3.0000	PC	W71-47103-05845	G71-47103-05845	PLUG;HOUSING;A3963H02;PITCH:3mm96;POLES:3;ROWS:1;UL94-V0;STRAIGHT		
34	224.0000	PC		G71-80000-05663	BD.-IN-CONN;TERMINAL;SAN-002T-0.8A		
35	1.0000	PC		G71-83102-05642	BOARD-IN-CONNECTOR;POLES:2;ROWS:1;STRAIGHT;PITCH:2 mm		
36	3.0000	PC		G71-83103-05643	BOARD-IN-CONNECTOR;POLES:3;ROWS:1;STRAIGHT;PITCH:2 mm		
37	6.0000	PC		G71-83104-05644	BOARD-IN-CONNECTOR;POLES:4;ROWS:1;STRAIGHT;PITCH:2 mm		
38	2.0000	PC		G71-83105-05647	BOARD-IN-CONNECTOR;POLES:5;ROWS:1;STRAIGHT;PITCH:2 mm		
39	2.0000	PC		G71-83106-05650	BOARD-IN-CONNECTOR;POLES:6;ROWS:1;STRAIGHT;PITCH:2 mm		
40	2.0000	PC		G71-83108-05652	BOARD-IN-CONNECTOR;POLES:8;ROWS:1;STRAIGHT;PITCH:2 mm		
41	1.0000	PC		G71-83110-05654	BOARD-IN-CONNECTOR;POLES:10;ROWS:1;STRAIGHT;PITCH:2 mm		
42	7.0000	PC		G71-83112-05657	BOARD-IN-CONNECTOR;POLES:12;ROWS:1;STRAIGHT;PITCH:2 mm		
43	2.0000	PC		G71-83113-05818	BOARD-IN-CONNECTOR;POLES:13;ROWS:1;STRAIGHT;PITCH:2 mm		

	Quantity	Unit	S.Sku	M.Sku	Description	Reference Designators	Notes
44	1.0000	PC		G71-83115-05661	BOARD-IN-CONNECTOR;POLES:15;ROWS:1;STRAIGHT;PITCH:2 mm		
45	1.0000	PC		G71-83116-05819	BOARD-IN-CONNECTOR;POLES:16;ROWS:1;STRAIGHT;PITCH:2 mm		
46	1.0000	PC	W76-00000-02200	G76-00000-02200	PLUG;RJ45;DUAL ROW;ANGLED	[P0AAQ:15: {1.0}(X23)]	
47	1.0000	PC		G76-00000-18427	PLUG;DIN;RJ45;8;2.54 MM;RJ45-112-8P8C-EP	[P0AAQ:15: {1.0}(X24)]	
48	2.0000	PC	W76-10580-03132	G76-10580-03132	PLUG;DIN;PLUG;FEMALE;POLES:5;ANGLED	[P0AAQ:15: {2.0}(X25-X26)]	

Power Supply

	Quantity	Unit	S.Sku	M.Sku	Description	Reference Designators	Notes
1	1.0000	PC	W83-02153-01037	G83-02153-01037	BUTTON-CELL;CAPACITY;215mAh;3V;SPEC.NO:01037;(CR2032)		X10
2	1.0000	PC	Z63-00000-40102	J63-00000-40102	TRANSFORMER;P0AAQ;EC3542 L:3.4mH MIN@1KHZ,0.25V X32 SG	[1:01: {1.0}(TR2)]	
3	2.0000	PC	Z66-00000-12096	J66-00000-12096	TRAFO:PULSE;P0ACI;VoIP MAGNETIC MODULE;H2006ANL;SMD	[P0AAQ:15: {2.0}(TR1-TR2)]	
4	1.0000	PC	Z66-05612-33272	J66-05612-33272	TRAFO;PULSE;PE-65612;SPEC.NO:33272	[P0AAQ:15: {1.0}(TR3)]	
5	1.0000	PC	W83-02153-01037	G83-02153-01037	BUTTON-CELL;CAPACITY;215mAh;3V;SPEC.NO:01037;(CR2032)		(EU, UL, UK, SAA, BR, AR, HM)

Quarz

	Quantity	Unit	S.Sku	M.Sku	Description	Reference Designators	Notes
1	7.0000	PC		H64-00000-15597	QUARZ;OSCILLATOR;8MHz;8pF;SIZE:5X3.2mm;50ppm;SMD	[P0AZP:00: {1.0}(Q2)]	
2	1.0000	PC		H64-00000-18819	QUARZ;OSCILLATOR;16 MHz;SMD;3.3V;50PPM;SIZE:7X5X1.5	[P0AAQ:15: {1.0}(Q1)]	
3	1.0000	PC		H64-00000-29819	QUARZ;OSCILLATOR;25 MHz;8pF;5X3MM2;SMD	[P0AAQ:16: {1.0}(Q2)]	
4	1.0000	PC		H64-00000-78019	QUARZ;OSCILLATOR;13 MHz;SMD;3.3V;SIZE:7X5X1.5	[P0AZP:00: {1.0}(Q3)]	
5	5.0000	PC	X65-00000-17608	H65-00000-17608	QUARZ;RESONATOR;12 MHz;8pF;SMD;SIZE:5X3MM2;50ppm	[P0B1S:06: {1.0}(Q1)]	
6	1.0000	PC		H65-00000-36991	QUARZ;RESONATOR;24 MHz;8pF;SMD;SIZE:5X3.2	[P0AAQ:16: {1.0}(Q4)]	
7	2.0000	PC		H65-00000-38720	QUARZ;RESONATOR;32.768 kHz;SMD;3.2*1.5	[P0AAQ:16: {2.0}(Q1,Q3)]	

Resistor

	Quantity	Unit	S.Sku	M.Sku	Description	Reference Designators	Notes
1	32.0000	PC			RESISTOR;METAL;110 ohm;0W100;1 %;100 PPM;SMD603;MET	[P0AAP:06: {8.0}(R232-R239)]	*NOT available in DP
2	2.0000	PC			RESISTOR;CARBON;43.2 ohm;0W125;1 %;100 PPM;SMD805;THICK FILM	[1:01: {2.0}(R86,R88)]	*NOT available in DP
3	64.0000	PC			RESISTOR;METAL;130 ohm;0W100;1 %;100 PPM;SMD603;MET	[P0AAP:06: {16.0}(R176-R183,R192-R199)]	*NOT available in DP
4	32.0000	PC			RESISTOR;METAL;15 ohm;0W100;1 %;100 PPM;SMD603;MET	[P0AAP:06: {8.0}(R288-R295)]	*NOT available in DP
5	2.0000	PC			RESISTOR;METAL;23.7 kohm;0W100;1 %;SMD805;MET	[1:01: {2.0}(R73,R79)]	*NOT available in DP
6	64.0000	PC			RESISTOR;METAL;62 ohm;0W100;1 %;100 PPM;SMD603;MET	[P0AAP:06: {16.0}(R240-R247,R249,R251,R253,R255,R257,R259,R261,R263)]	*NOT available in DP
7	1.0000	PC			RESISTOR;METAL;6.2 kohm;0W25;1 %;SMD1206	[1:01: {1.0}(R39)]	*NOT available in DP
8	2.0000	PC			RESISTOR;METAL;620 kohm;0W25;1 %;SMD1206	[1:01: {2.0}(R22-R23)]	*NOT available in DP
9	2.0000	PC			RESISTOR;METAL;68 kohm;0W25;1 %;SMD1206	[1:01: {2.0}(R29-R30)]	*NOT available in DP
10	6.0000	PC			RESISTOR;CARBON;4.7 kohm;0.0625 W;5 %;100 ppm;SMD402	[P0AAQ:16: {6.0}(R59-R60,R63-R66)]	*NOT available in DP
11	32.0000	PC			RESISTOR;METAL;11 ohm;0W0625;1 %;200 PPM;SMD603;THICK FILM	[P0AAP:06: {8.0}(R296,R298,R300,R302,R304,R306,R308,R310)]	*NOT available in DP
12	32.0000	PC			RESISTOR;METAL;27 ohm;0W0625;1 %;200 PPM;SMD603;THICK FILM	[P0AAP:06: {8.0}(R272-R279)]	*NOT available in DP
13	64.0000	PC			RESISTOR;THICK FILM;6K8 ohm; 1%;SMD1210	[P0AAP:06: {16.0}(R456-R471)]	*NOT available in DP
14	29.0000	PC			RESISTOR;CARBON;180ohm;5%;0W063;SMD603	[P0B1S:06: {8.0}(R47,R61,R72-R73,R96,R121-R123)]	*NOT available in DP
15	5.0000	PC			RESISTOR;CARBON;0ohm;5%;0W063;SMD603	[P0AAQ:15: {5.0}(R11,R22-R24,R27)]	*NOT available in DP
16	1.0000	PC			RESISTOR;CARBON;2ohm2;5%;0W063;SMD603	[P0AZP:00: {1.0}(R224)]	*NOT available in DP
17	5.0000	PC			RESISTOR;CARBON;10ohm;5%;0W063;SMD603	[P0AAQ:15: {2.0}(R222-R223)]	*NOT available in DP
18	29.0000	PC			RESISTOR;CARBON;33ohm;5%;0W063;SMD603	[P0AZP:00: {23.0}(R3,R5-R11,R17-R20,R23-R26,R31-R34,R42,R46-R47)]	*NOT available in DP
19	26.0000	PC			RESISTOR;CARBON;47ohm;5%;0W063;SMD603	[P0AAQ:15: {15.0}(R6-R7,R9-R10,R13-R15,R17,R82,R86-R87,R92,R97-R98,R207)]	*NOT available in DP
20	157.0000	PC			RESISTOR;CARBON;100ohm;5%;0W063;SMD603	[P0AZP:00: {1.0}(R62)]	*NOT available in DP
21	743.0000	PC			RESISTOR;CARBON;330ohm;5%;0W063;SMD603	[P0AAQ:15: {4.0}(R16,R18,R69,R165)]	*NOT available in DP
22	32.0000	PC			RESISTOR;CARBON;1Kohm;5%;0W063;SMD603	[P0AZP:00: {4.0}(R21-R22,R35,R221)]	*NOT available in DP
23	2.0000	PC			RESISTOR;CARBON;1Kohm2;5%;0W063;SMD603	[P0B1S:11: {2.0}(R32,R36)]	*NOT available in DP
24	31.0000	PC			RESISTOR;CARBON;2Kohm;5%;0W063;SMD603	[P0B1S:06: {8.0}(R103,R106-R110,R112-R113)]	*NOT available in DP
25	4.0000	PC			RESISTOR;CARBON;2Kohm2;5%;0W063;SMD603	[P0AZP:00: {1.0}(R27)]	*NOT available in DP
26	32.0000	PC			RESISTOR;CARBON;3Kohm9;5%;0W063;SMD603	[P0AAP:06: {8.0}(R248,R250,R252,R254,R256,R258,R260,R262)]	*NOT available in DP
27	33.0000	PC			RESISTOR;CARBON;4Kohm7;5%;0W063;SMD603	[P0AZP:00: {1.0}(R71)]	*NOT available in DP
28	1.0000	PC			RESISTOR;CARBON;6Kohm8;5%;0W063;SMD603	[P0AZP:00: {1.0}(R79)]	*NOT available in DP
29	327.0000	PC			RESISTOR;CARBON;10Kohm;5%;0W063;SMD603	[P0AZP:00: {7.0}(R16,R30,R41,R43-R44,R58,R223)]	*NOT available in DP
30	1.0000	PC			RESISTOR;CARBON;15Kohm;5%;0W063;SMD603	[P0B1S:11: {1.0}(R15)]	*NOT available in DP
31	1.0000	PC			RESISTOR;CARBON;18Kohm;5%;0W063;SMD603	[P0B1S:11: {1.0}(R2)]	*NOT available in DP
32	48.0000	PC			RESISTOR;CARBON;20Kohm;5%;0W063;SMD603	[P0AAQ:04: {24.0}(R19-R42)]	*NOT available in DP
33	1.0000	PC			RESISTOR;CARBON;22Kohm;5%;0W063;SMD603	[P0AAQ:15: {1.0}(R44)]	*NOT available in DP
34	1.0000	PC			RESISTOR;CARBON;27Kohm;5%;0W063;SMD603	[P0AAQ:15: {1.0}(R42)]	*NOT available in DP
35	3.0000	PC			RESISTOR;CARBON;30Kohm;5%;0W063;SMD603	[P0B1S:06: {1.0}(R8)]	*NOT available in DP
36	39.0000	PC			RESISTOR;CARBON;47Kohm;5%;0W063;SMD603	[P0AZP:00: {1.0}(R60)]	*NOT available in DP
37	2.0000	PC			RESISTOR;CARBON;82Kohm;5%;0W063;SMD603	[P0B1S:11: {2.0}(R8,R14)]	*NOT available in DP
38	8.0000	PC			RESISTOR;CARBON;100Kohm;5%;0W063;SMD603	[P0AAQ:20: {1.0}(R45)]	*NOT available in DP
39	3.0000	PC			RESISTOR;CARBON;150Kohm;5%;0W063;SMD603	[P0B1S:06: {1.0}(R18)]	*NOT available in DP
40	34.0000	PC			RESISTOR;METAL;10ohm;1%;0W063;SMD603	[P0AAP:06: {8.0}(R33,R36,R39,R42,R45,R48,R51,R54)]	*NOT available in DP
41	32.0000	PC			RESISTOR;METAL;33ohm;1%;0W063;SMD603	[P0AAP:06: {8.0}(R280-R287)]	*NOT available in DP

	Quantity	Unit	S.Sku	M.Sku	Description	Reference Designators	Notes
42	32.0000	PC			RESISTOR;METAL;51ohm;1%;0W063;SMD603	[P0AAP:06: {8.0}(R104,R106,R108,R110,R112,R114,R116,R118)]	*NOT available in DP
43	4.0000	PC			RESISTOR;METAL;51ohm1;1%;METAL;0W063;SMD603	[P0AAQ:16: {4.0}(R47,R50,R53,R56)]	*NOT available in DP
44	96.0000	PC			RESISTOR;METAL;120ohm;1%;0W063;SMD603	[P0AAP:06: {24.0}(R57-R58,R61-R62,R65-R66,R69-R70,R73-R74,R77-R78,R81-R82,R85-R86,R264-R271)]	*NOT available in DP
45	1.0000	PC			RESISTOR;METAL;200ohm;1%;0W063;SMD603	[P0AZP:00: {1.0}(R70)]	*NOT available in DP
46	1.0000	PC			RESISTOR;METAL;332ohm;1%;0W063;SMD603	[P0AZP:00: {1.0}(R69)]	*NOT available in DP
47	32.0000	PC			RESISTOR;METAL;390ohm;1%;0W063;SMD603	[P0AAP:06: {8.0}(R204-R211)]	*NOT available in DP
48	32.0000	PC			RESISTOR;METAL;470ohm;1%;0W063;SMD603	[P0AAP:06: {8.0}(R216-R223)]	*NOT available in DP
49	6.0000	PC			RESISTOR;METAL;499ohm;1%;0W063;SMD603	[P0AAQ:15: {6.0}(R62,R96,R103,R140,R155,R180)]	*NOT available in DP
50	96.0000	PC			RESISTOR;SMD;METAL;910ohm;1%;0W063;SMD603	[P0AAP:06: {24.0}(R56,R59-R60,R63-R64,R67-R68,R71-R72,R75-R76,R79-R80,R83-R84,R87,R184-R191)]	*NOT available in DP
51	113.0000	PC			RESISTOR;METAL;1Kohm;1%;0W063;SMD603	[P0AAQ:15: {16.0}(R34,R40,R48-R49,R58,R61,R93,R95,R99,R102,R137,R139,R151,R154,R177,R179)]	*NOT available in DP
52	64.0000	PC			RESISTOR;METAL;1Kohm1;1%;0W063;SMD603	[P0AAQ:20: {32.0}(R102-R109,R114,R116-R117,R119-R120,R122-R123,R125,R159,R161,R163,R165,R167,R169,R171,R173-R181)]	*NOT available in DP
53	32.0000	PC			RESISTOR;METAL;1Kohm3;1%;0W063;SMD603	[P0AAP:06: {8.0}(R224-R231)]	*NOT available in DP
54	1.0000	PC			RESISTOR;METAL;2Kohm;1%;0W063;SMD603	[P0AZP:00: {1.0}(R2)]	*NOT available in DP
55	32.0000	PC			RESISTOR;METAL;2Kohm2;1%;0W063;SMD603	[P0AAP:06: {8.0}(R165,R167,R169,R171-R175)]	*NOT available in DP
56	32.0000	PC			RESISTOR;METAL;2Kohm21;1%;0W063;SMD603	[P0AAQ:20: {16.0}(R110-R113,R115,R118,R121,R124,R158,R160,R162,R164,R166,R168,R170,R172)]	*NOT available in DP
57	16.0000	PC			RESISTOR;METAL;2Kohm67;1%;0W063;SMD603	[P0AAQ:15: {16.0}(R63-R66,R115-R118,R131-R134,R181-R184)]	*NOT available in DP
58	32.0000	PC			RESISTOR;SMT;2Kohm7;1%;METAL;0W063;SMD603	[P0AAP:06: {8.0}(R128,R130,R132,R134,R136-R139)]	*NOT available in DP
59	1.0000	PC			RESISTOR;METAL;3Kohm;1%;0W063;SMD603	[P0AZP:00: {1.0}(R1)]	*NOT available in DP
60	64.0000	PC			RESISTOR;METAL;3Kohm30;1%;0W063;SMD603	[P0AAP:06: {16.0}(R337-R338,R341-R342,R345-R346,R349-R350,R353-R354,R357-R358,R361-R362,R365-R366)]	*NOT available in DP
61	32.0000	PC			RESISTOR;METAL;3Kohm32;1%;0W063;SMD603	[P0AAQ:20: {16.0}(R46,R49-R50,R53-R54,R57-R58,R61,R86-R93)]	*NOT available in DP
62	32.0000	PC			RESISTOR;METAL;3Kohm74;1%;0W063;SMD603	[P0AAQ:20: {16.0}(R37-R44,R63-R64,R67-R68,R71-R72,R75-R76)]	*NOT available in DP
63	1.0000	PC			RESISTOR;METAL;4Kohm7;1%;0W063;SMD603	[P0AAQ:15: {1.0}(R38)]	*NOT available in DP
64	2.0000	PC			RESISTOR;METAL;5Kohm1;1%;0W063;SMD603	[P0B1S:11: {2.0}(R22,R28)]	*NOT available in DP
65	2.0000	PC			RESISTOR;METAL;5Kohm11;1%;0W063;SMD603	[P0AAQ:15: {2.0}(R32-R33)]	*NOT available in DP
66	16.0000	PC			RESISTOR;METAL;5Kohm6;1%;0W063;SMD603	[P0AAQ:15: {16.0}(R55-R56,R75,R80,R105-R106,R111-R112,R122-R123,R142,R147,R169-R170,R175-R176)]	*NOT available in DP
67	32.0000	PC			RESISTOR;METAL;9Kohm09;1%;0W063;SMD603	[P0AAP:06: {8.0}(R200-R203,R212-R215)]	*NOT available in DP
68	324.0000	PC			RESISTOR;METAL;10Kohm;1%;0W063;SMD603	[P0AZP:00: {1.0}(R54)]	*NOT available in DP
69	3.0000	PC			RESISTOR;METAL;12Kohm1;1%;0W063;SMD603	[P0AAQ:15: {2.0}(R161-R162)]	*NOT available in DP
70	16.0000	PC			RESISTOR;METAL;12Kohm4;1%;0W063;SMD603	[P0AAQ:15: {16.0}(R76-R79,R107-R110,R143-R146,R171-R174)]	*NOT available in DP
71	32.0000	PC			RESISTOR;METAL;15Kohm;1%;0W063;SMD603	[P0AAQ:20: {16.0}(R47-R48,R51-R52,R55-R56,R59-R60,R78-R85)]	*NOT available in DP
72	1.0000	PC			RESISTOR;METAL;16Kohm;1%;0W063;SMD603	[P0AAQ:16: {1.0}(R45)]	*NOT available in DP
73	64.0000	PC			RESISTOR;METAL;20Kohm;1%;0W063;SMD603	[P0AAP:06: {16.0}(R120,R122,R124,R126,R140-R143,R150-R151,R154-R155,R158-R159,R162-R163)]	*NOT available in DP
74	32.0000	PC			RESISTOR;METAL;33Kohm;1%;0W1;SMD805	[P0AAP:06: {8.0}(R416-R423)]	*NOT available in DP
75	65.0000	PC			RESISTOR;METAL;47Kohm;1%;0W063;SMD603	[P0AAQ:15: {1.0}(R37)]	*NOT available in DP

	Quantity	Unit	S.Sku	M.Sku	Description	Reference Designators	Notes
76	32.0000	PC			RESISTOR;METAL;68Kohm;1%;0W063;SMD603	[P0AAP:06: {8.0}(R297,R299,R301,R303,R305,R307,R309,R311)]	*NOT available in DP
77	32.0000	PC			RESISTOR;METAL;180Kohm;1%;0W063;SMD603	[P0AAP:06: {8.0}(R144-R148,R152,R156,R160)]	*NOT available in DP
78	1.0000	PC			RESISTOR;METAL;470Kohm;1%;0W063;SMD603	[P0AZP:00: {1.0}(R28)]	*NOT available in DP
79	2.0000	PC			RESISTOR;THICK FILM;22ohm;0W063;5%;SMD402	[P0AAQ:16: {2.0}(R70-R71)]	*NOT available in DP
80	1.0000	PC			RESISTOR;METAL;11Kohm3;1%;PPM100;0W063;SMD603	[P0AAQ:16: {1.0}(R69)]	*NOT available in DP
81	13.0000	PC			RESISTOR;CARBON;0ohm;5%;0W1;SMD805	[P0AZP:00: {6.0}(R12-R14,R50,R53,R55)]	*NOT available in DP
82	4.0000	PC			RESISTOR;CARBON;2ohm2;5%;0W1;SMD805	[P0AAQ:15: {4.0}(R194-R197)]	*NOT available in DP
83	47.0000	PC			RESISTOR;CARBON;5ohm1;5%;0W1;SMD805	[P0AZP:00: {1.0}(R45)]	*NOT available in DP
84	68.0000	PC			RESISTOR;CARBON;10ohm;5%;0W1;SMD805	[P0AAQ:15: {2.0}(R45,R104)]	*NOT available in DP
85	4.0000	PC			RESISTOR;CARBON;22ohm;5%;0W1;SMD805	[P0B1S:11: {4.0}(R11,R16,R24,R31)]	*NOT available in DP
86	16.0000	PC			RESISTOR;CARBON;75ohm;5%;0W1;SMD805	[P0AAQ:15: {8.0}(R199-R206)]	*NOT available in DP
87	3.0000	PC			RESISTOR;CARBON;100ohm;5%;0W1;SMD805	[1:01: {1.0}(R93)]	*NOT available in DP
88	1.0000	PC			RESISTOR;CARBON;110ohm;5%;0W1;SMD805	[P0AAQ:15: {1.0}(R198)]	*NOT available in DP
89	86.0000	PC			RESISTOR;CARBON;150ohm;5%;0W1;SMD805	[P0AAQ:04: {12.0}(R1,R4,R6,R8,R10,R12-R18)]	*NOT available in DP
90	1.0000	PC			RESISTOR;CARBON;200ohm;5%;0W1;SMD805	[P0AAQ:15: {1.0}(R213)]	*NOT available in DP
91	32.0000	PC			RESISTOR;CARBON;390ohm;5%;0W1;SMD805	[P0AAP:06: {8.0}(R377,R381,R385,R389,R393,R397,R401,R405)]	*NOT available in DP
92	6.0000	PC			RESISTOR;CARBON;470ohm;5%;0W1;SMD805	[1:01: {5.0}(R94,R132-R135)]	*NOT available in DP
93	4.0000	PC			RESISTOR;CARBON;1Kohm;5%;0W1;SMD805	[1:01: {4.0}(R48,R84,R108,R111)]	*NOT available in DP
94	32.0000	PC			RESISTOR;CARBON;2Kohm2;5%;0W1;SMD805	[P0AAQ:20: {16.0}(R222-R237)]	*NOT available in DP
95	1.0000	PC			RESISTOR;CARBON;2Kohm7;5%;0W1;SMD805	[1:01: {1.0}(R57)]	*NOT available in DP
96	1.0000	PC			RESISTOR;CARBON;3Kohm3;5%;0W1;SMD805	[1:01: {1.0}(R116)]	*NOT available in DP
97	2.0000	PC			RESISTOR;CARBON;4Kohm7;5%;0W1;SMD805	[1:01: {2.0}(R28,R128)]	*NOT available in DP
98	1.0000	PC			RESISTOR;CARBON;6Kohm8;5%;0W1;SMD805	[1:01: {1.0}(R27)]	*NOT available in DP
99	1.0000	PC			RESISTOR;CARBON;27Kohm;5%;0W1;SMD805	[1:01: {1.0}(R41)]	*NOT available in DP
100	41.0000	PC			RESISTOR;CARBON;100Kohm;5%;0W1;SMD805	[1:01: {1.0}(R110)]	*NOT available in DP
101	1.0000	PC			RESISTOR;CARBON;1Mohm;5%;0W1;SMD805	[1:01: {1.0}(R61)]	*NOT available in DP
102	4.0000	PC			RESISTOR;METAL;10ohm;1%;0W1;SMD805	[1:01: {4.0}(R52,R67,R90,R92)]	*NOT available in DP
103	9.0000	PC			RESISTOR;METAL;100ohm;1%;0W1;SMD805	[1:01: {1.0}(R112)]	*NOT available in DP
104	17.0000	PC			RESISTOR;METAL;120ohm;1%;0W1;SMD805	[P0AAQ:15: {1.0}(R8)]	*NOT available in DP
105	64.0000	PC			RESISTOR;METAL;150ohm;1%;0W1;SMD805	[P0AAP:06: {16.0}(R378,R382,R386,R390,R394,R398,R402,R406,R408-R415)]	*NOT available in DP
106	7.0000	PC			RESISTOR;METAL;200ohm;1%;0W1;SMD805	[1:01: {1.0}(R107)]	*NOT available in DP
107	7.0000	PC			RESISTOR;METAL;357ohm;1%;0W1;SMD805	[P0AAQ:15: {1.0}(R1)]	*NOT available in DP
108	3.0000	PC			RESISTOR;METAL;510ohm;1%;0W1;SMD805	[1:01: {3.0}(R87,R97-R98)]	*NOT available in DP
109	1.0000	PC			RESISTOR;METAL;845ohm;1%;0W1;SMD805	[1:01: {1.0}(R85)]	*NOT available in DP
110	1.0000	PC			RESISTOR;METAL;931ohm;1%;0W1;SMD805	[1:01: {1.0}(R115)]	*NOT available in DP
111	77.0000	PC			RESISTOR;METAL;1Kohm;1%;0W1;SMD805	[1:01: {11.0}(R24,R35,R49-R50,R58,R65,R82,R89,R91,R101,R126)]	*NOT available in DP
112	2.0000	PC			RESISTOR;METAL;1Kohm10;1%;0W1;SMD805	[1:01: {2.0}(R81,R100)]	*NOT available in DP
113	1.0000	PC			RESISTOR;METAL;1Kohm8;1%;0W1;SMD805	[1:01: {1.0}(R72)]	*NOT available in DP
114	2.0000	PC			RESISTOR;METAL;2Kohm;1%;0W1;SMD805	[1:01: {2.0}(R32,R70)]	*NOT available in DP
115	7.0000	PC			RESISTOR;METAL;4Kohm7;1%;0W1;SMD805	[1:01: {7.0}(R34,R42,R51,R66,R71,R80,R131)]	*NOT available in DP
116	1.0000	PC			RESISTOR;METAL;5Kohm1;1%;0W1;SMD805	[1:01: {1.0}(R56)]	*NOT available in DP
117	1.0000	PC			RESISTOR;METAL;5Kohm6;1%;0W1;SMD805	[1:01: {1.0}(R40)]	*NOT available in DP
118	2.0000	PC			RESISTOR;METAL;8Kohm20;1%;0W1;SMD603	[P0AZP:00: {1.0}(R29)]	*NOT available in DP
119	2.0000	PC			RESISTOR;METAL;8Kohm66;1%;0W1;SMD805	[1:01: {2.0}(R113-R114)]	*NOT available in DP

	Quantity	Unit	S.Sku	M.Sku	Description	Reference Designators	Notes
120	8.0000	PC			RESISTOR;METAL;10Kohm;1%;0W1;SMD805	[1:01: {8.0}(R54,R60,R68-R69,R95,R129-R130,R139)]	*NOT available in DP
121	4.0000	PC			RESISTOR;METAL;22Kohm;1%;0W1;SMD805	[P0AAP:06: {1.0}(R31)]	*NOT available in DP
122	1.0000	PC			RESISTOR;METAL;24Kohm9;1%;0W1;SMD805	[1:01: {1.0}(R33)]	*NOT available in DP
123	64.0000	PC			RESISTOR;METAL;47Kohm;1%;0W1;SMD805	[P0AAP:06: {16.0}(R424-R439)]	*NOT available in DP
124	1.0000	PC			RESISTOR;METAL;120Kohm;1%;0W1;SMD805	[1:01: {1.0}(R55)]	*NOT available in DP
125	1.0000	PC			RESISTOR;METAL;68Kohm;1%;0W125;SMD805	[1:01: {1.0}(R64)]	*NOT available in DP
126	8.0000	PC			RESISTOR;METAL;49ohm9;1%;PPM50;0W125;SMD603	[P0AAQ:15: {8.0}(R185-R192)]	*NOT available in DP
127	1.0000	PC			RESISTOR;CARBON;2ohm2;5%;0W25;SMD1206	[1:01: {1.0}(R99)]	*NOT available in DP
128	2.0000	PC			RESISTOR;CARBON;100ohm;5%;0W25;SMD1206	[1:01: {2.0}(R14,R83)]	*NOT available in DP
129	1.0000	PC			RESISTOR;CARBON;1Kohm2;5%;0W25;SMD1206	[1:01: {1.0}(R96)]	*NOT available in DP
130	2.0000	PC			RESISTOR;CARBON;6Kohm8;5%;0W25;SMD1206	[1:01: {2.0}(R74,R109)]	*NOT available in DP
131	1.0000	PC			RESISTOR;CARBON;20Kohm;5%;0W25;SMD1206	[1:01: {1.0}(R59)]	*NOT available in DP
132	2.0000	PC			RESISTOR;CARBON;470Kohm;5%;0W25;SMD1206	[1:01: {2.0}(R19,R25)]	*NOT available in DP
133	1.0000	PC			RESISTOR;METAL;10ohm;1%;0W25;SMD1206	[1:01: {1.0}(R62)]	*NOT available in DP
134	1.0000	PC			RESISTOR;METAL;51ohm;1%;0W25;SMD1206	[1:01: {1.0}(R121)]	*NOT available in DP
135	2.0000	PC			RESISTOR;METAL;100ohm;1%;0W25;SMD1206	[1:01: {2.0}(R78,R120)]	*NOT available in DP
136	2.0000	PC			RESISTOR;METAL;200ohm;1%;0W25;SMD1206	[1:01: {2.0}(R76-R77)]	*NOT available in DP
137	4.0000	PC			RESISTOR;SMT;220ohm;1%;METAL;0W25;SMD1206	[1:01: {4.0}(R122-R125)]	*NOT available in DP
138	1.0000	PC			RESISTOR;METAL;240ohm;1%;0W25;SMD1206	[1:01: {1.0}(R105)]	*NOT available in DP
139	4.0000	PC			RESISTOR;METAL;1Kohm;1%;0W25;SMD1206	[1:01: {4.0}(R26,R102-R103,R127)]	*NOT available in DP
140	1.0000	PC			RESISTOR;SMD;METAL;2Kohm;1%;0W25;SMD1206	[1:01: {1.0}(R31)]	*NOT available in DP
141	2.0000	PC			RESISTOR;METAL;3Kohm;1%;0W25;SMD1206	[1:01: {2.0}(R1-R2)]	*NOT available in DP
142	6.0000	PC			RESISTOR;METAL;4.7 kohm;0.25 W;1 %;SMD1206	[1:01: {6.0}(R104,R106,R117,R119,R136-R137)]	*NOT available in DP
143	4.0000	PC			RESISTOR;METAL;10Kohm;1%;0W25;SMD1206	[1:01: {4.0}(R45,R47,R53,R118)]	*NOT available in DP
144	3.0000	PC			RESISTOR;METAL;332Kohm;1%;0W25;SMD1206	[1:01: {3.0}(R36-R38)]	*NOT available in DP
145	6.0000	PC			RESISTOR;SMT;470Kohm;5%;METAL;0W25;SMD1206	[1:01: {6.0}(R15-R18,R20-R21)]	*NOT available in DP
146	3.0000	PC			RESISTOR;THICK FILM;22ohm;5%;0W25;SMD1206	[1:01: {3.0}(R44,R46,R63)]	*NOT available in DP
147	2.0000	PC			RESISTOR;THICK FILM;43ohm;0W25;5%;SMD1206	[1:01: {2.0}(R138,R140)]	*NOT available in DP
148	3.0000	PC			RESISTOR;CARBON;1Kohm;5%;0W0625;SMD402	[P0AAQ:16: {3.0}(R44,R77-R78)]	*NOT available in DP
149	1.0000	PC			RESISTOR;CARBON;2KOhm;5%;0W0625;SMD402	[P0AAQ:16: {1.0}(R74)]	*NOT available in DP
150	30.0000	PC			RESISTOR;THICK FILM;10Kohm;5%;0W0625;SMD402	[P0AAQ:16: {30.0}(R1-R9,R20-R22,R24-R29,R31-R32,R35,R42-R43,R46,R51,R61,R67,R75,R79,R82)]	*NOT available in DP
151	1.0000	PC			RESISTOR;THICK FILM;150Ohm;0W0625;1%;SMD402	[P0AAQ:16: {1.0}(R62)]	*NOT available in DP
152	3.0000	PC			RESISTOR;METAL;1Kohm05;1%;METAL;0W0625;SMD402	[P0AAQ:16: {3.0}(R55,R57,R81)]	*NOT available in DP
153	2.0000	PC			RESISTOR;THICK FILM;33ohm;1%;PPM100;0W0625;SMD402	[P0AAQ:16: {2.0}(R84-R85)]	*NOT available in DP
154	3.0000	PC			RESISTOR;METAL;PPM100;100ohm;0W0625;1%;SMD402	[P0AAQ:16: {3.0}(R72-R73,R83)]	*NOT available in DP
155	1.0000	PC			RESISTOR;METAL;1Mohm;1%;PPM100;0W0625;SMD402	[P0AAQ:16: {1.0}(R80)]	*NOT available in DP
156	1.0000	PC	Y04-05000-05423	I04-05000-05423	THERMISTOR;NTC;5ohm;+/-20%;6A;DIA:15mm;PITCH:7mm5;(THINKING SCK15056MSY)	[1:01: {1.0}(R3)]	
157	1.0000	PC		I04-23301-01841	THERMISTOR;PTC;330ohms;2Kohm2;20%;DIA:;W/ LUG;(THINKING PTMS2331RP430Y)	[1:01: {1.0}(R10)]	
158	1.0000	PC			RESISTOR;CARBON;100ohm;5%;1W;LEAD WIRE;HORIZONTAL 52-6mm	[1:01: {1.0}(R141)]	*NOT available in DP
159	1.0000	PC			RESISTOR;METAL;220 kohm;3WS;5 %;F-TYPE;METAL OXIDE FILM	[1:01: {1.0}(R4)]	*NOT available in DP
160	2.0000	PC			RESISTOR;METAL;6Kohm81;1%;0W25;LEAD WIRE	[P0B1S:11: {2.0}(R43,R45)]	*NOT available in DP
161	1.0000	PC			RESISTOR;CARBON;33ohm;5%;1W;LEAD WIRE	[1:01: {1.0}(R43)]	*NOT available in DP
162	2.0000	PC			RESISTOR;CARBON;220ohm;5%;1W;LEAD WIRE	[1:01: {2.0}(R8-R9)]	*NOT available in DP
163	1.0000	PC			RESISTOR;CARBON;100ohm;5%;2W;LEAD WIRE	[1:01: {1.0}(R7)]	*NOT available in DP
164	1.0000	PC			RESISTOR;CARBON;330ohm;5%;2W;LEAD WIRE	[1:01: {1.0}(R75)]	*NOT available in DP

	Quantity	Unit	S.Sku	M.Sku	Description	Reference Designators	Notes
165	2.0000	PC			RESISTOR;CARBON;4Kohm7;5%;2W;LEAD WIRE;F-TYPE	[1:01: {2.0}(R12-R13)]	*NOT available in DP
166	1.0000	PC			RESISTOR;LEAD WIRE;0ohm10;1%;METAL;2W0;F-TYPE	[1:01: {1.0}(R6)]	*NOT available in DP
167	1.0000	PC			RESISTOR;METAL;0ohm2;1%;2W;LEAD WIRE	[1:01: {1.0}(R5)]	*NOT available in DP
168	1.0000	PC			RESISTOR;LEAD WIRE;AXIAL;2Kohm;5%;METAL OXIDE;2W	[1:01: {1.0}(R11)]	*NOT available in DP

Fader

	Quantity	Unit	S.Sku	M.Sku	Description	Reference Designators	Notes
1	25.0000	PC	Y00-00000-19575	I00-00000-19575	FADER;10 kohm;B;20 %;MONO	[P0B1S:06: {8.0}(VR1-VR8)]	
2	25.0000	PC	Y00-00000-37172	I00-00000-37172	FADER;10 kohm;0W5;B;10 %;MONO;FORCE:10gf;CARB;3.75 MM;TRAVEL:100;EVERBEST;C0022N-A1-13H-B10K-B-L038		

Potentiometer

	Quantity	Unit	S.Sku	M.Sku	Description	Reference Designators	Notes
1	2.0000	PC		I03-00000-67018	POTENTIOMETER;50 kohm;0.050W;A;20 %;STEREO;SHAFT:30MM;0CC;HIGH TORQUE;NOBLE	[P0B1S:11: {2.0}(VR1,VR3)]	
2	1.0000	PC		I03-00000-67019	POTENTIOMETER;50 kohm;0.050W;C;20 %;STEREO;SHAFT:30MM;0CC;HIGH TORQUE;NOBLE	[P0B1S:11: {1.0}(VR2)]	

Encoder

	Quantity	Unit	S.Sku	M.Sku	Description	Reference Designators	Notes
1	17.0000	PC	Y32-00000-18946	I32-00000-18946	ENCODER;2.5 MM;SHT:25;24PL;0CC;ENDLESS;30~80gf;TRANSPARENT SHAFT	[P0B1S:13: {4.0}(SW13-SW16)]	
2	6.0000	PC	Y32-00000-19166	I32-00000-19166	ENCODER;24PL;SWITCH;30~80gf;24CC;ENDLESS;SHT:25mm3	[P0B1S:09: {6.0}(SW2-SW7)]	

Switch

	Quantity	Unit	S.Sku	M.Sku	Description	Reference Designators	Notes
1	2.0000	PC	Y87-00000-39582	I87-00000-39582	SWITCH;TACTILE;1;NONLOCK;4;VERTICAL;HANDLE:5	[P0AAQ:15: {2.0}(SW1-SW2)]	

Transistor

	Quantity	Unit	S.Sku	M.Sku	Description	Reference Designators	Notes
1	64.0000	PC			TRANSISTOR;3;SOT-23;2SC2713BL;SMD	[P0AAP:06: {16.0}(T17-T32)]	*NOT available in DP
2	2.0000	PC			TRANSISTOR;SMD;3;PNP;DZT5401-13;1W;SOT-223	[1:01: {2.0}(T7,T10)]	*NOT available in DP
3	1.0000	PC			TRANSISTOR;MOSFET;20N60;TO220F	[1:01: {1.0}(T3)]	*NOT available in DP
4	2.0000	PC			TRANSISTOR;MOSFET;FQPF13N50C;TO220F	[1:01: {2.0}(T1-T2)]	*NOT available in DP
5	36.0000	PC			TRANSISTOR;MBTA06;SOT	[P0AAP:06: {8.0}(T2,T4,T6,T8,T10,T12,T14,T16)]	*NOT available in DP
6	39.0000	PC			TRANSISTOR;MBTA56;SOT	[P0AAP:06: {8.0}(T1,T3,T5,T7,T9,T11,T13,T15)]	*NOT available in DP
7	2.0000	PC			TRANSISTOR;MBTA92;SOT	[1:01: {2.0}(T8-T9)]	*NOT available in DP
8	8.0000	PC			TRANSISTOR;MMBT3904LT1;SOT23;SMD	[1:01: {6.0}(T4,T12-T16)]	*NOT available in DP
9	3.0000	PC			TRANSISTOR;MMBT3906;SOT23;SMD	[1:01: {3.0}(T5-T6,T11)]	*NOT available in DP
10	50.0000	PC			TRANSISTOR;BC327-25;TO92;PITCH:2.54;TAPE	[P0B1S:6: {16.0}(T1-T7,T15,T24-T30,T32)]	*NOT available in DP
11	50.0000	PC			TRANSISTOR;BC337-25;TO92;P:2.54(BENT LEAD;TAPE and REEL);FAIRCHILD	[P0B1S:6: {16.0}(T8-T14,T16-T23,T31)]	*NOT available in DP
12	36.0000	PC			TRANSISTOR;SST113;SOT	[P0AAQ:20: {16.0}(T3-T18)]	*NOT available in DP

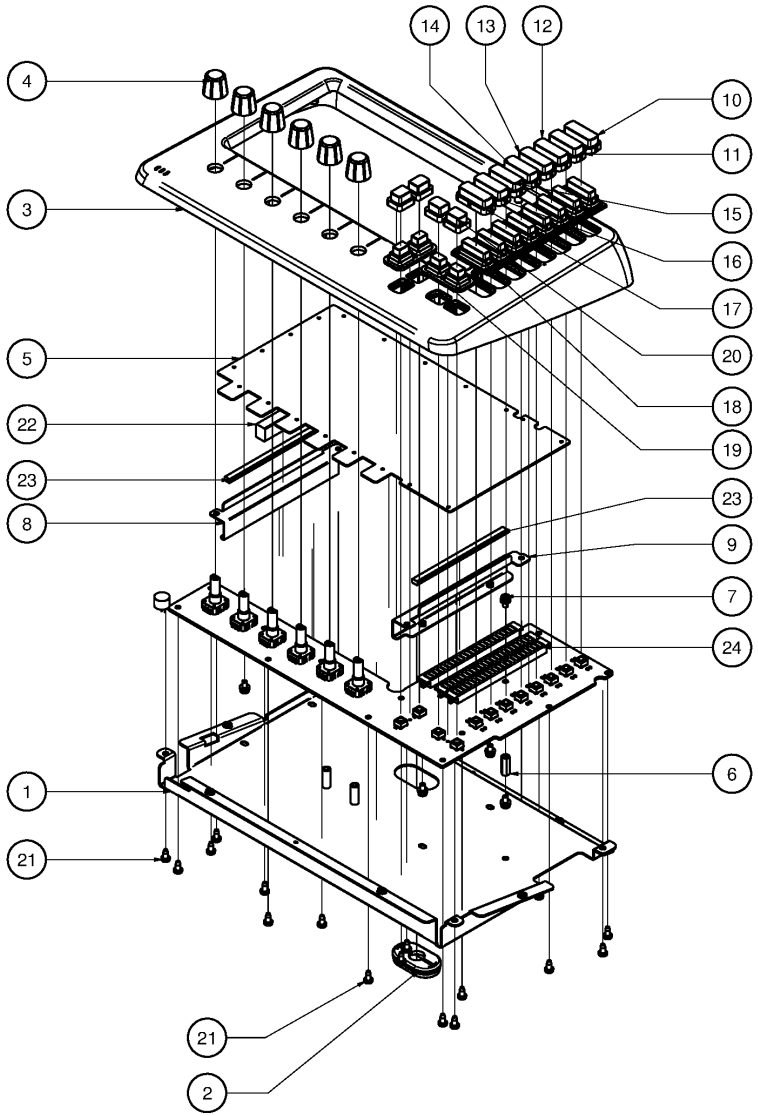

REVISION HISTORY

REV	DESCRIPTION	DATE	REVISED	APPROVED
A	DRAWING UPDATED	2013-06-19	CM ILAPAN	J.BALINGIT

ITEM	ITEM NUMBER	QTY	ITEM CODE	CONSTRUCTION NO.
24	G53-00000-59100	3	PLA-P0AAQ/HOLDER/BK/TP	022-00000-24596
23	F97-00000-54456	2	MI-P0AAQ/CONDUCTIVE-FOAM2	
22	F97-00000-54455	1	MI-P0AAQ/CONDUCTIVE_FOAM1	
21	F88-30060-30247	20	SC-BT03*06-03-B-ZP-BLK[R]	
20	I63-00000-48490	4	PLA-P0AAQ/BUTTON/TP/BM	022-00000-37832
19	G53-00000-36374	2	PLA-P0AAQ/DISPLAY_NEV_BUTTON	022-00000-37824
18	G53-00000-36373	1	PLA-P0AAQ/DISPLAY_BUTTON_RUBBER	022-00000-37820
17	I63-00000-48489	1	PLA-P0AAQ/BUTTON/UTILITY/TP/BM	022-00000-25116
16	I63-00000-48488	1	PLA-P0AAQ/BUTTON/MUTEGRP/TP/BM	022-00000-25116
15	I63-00000-48487	1	PLA-P0AAQ/BUTTON/EFFECT/TP/BM	022-00000-25116
14	I63-00000-48486	1	PLA-P0AAQ/BUTTON/LIBRARY/TP/BM	022-00000-25116
13	I63-00000-48485	1	PLA-P0AAQ/BUTTON/SETUP/TP/BM	022-00000-25116
12	I63-00000-48484	1	PLA-P0AAQ/BUTTON/ROUTING/TP/BM	022-00000-25116
11	I63-00000-48483	1	PLA-P0AAQ/BUTTON/METERS/TP/BM	022-00000-25116
10	I63-00000-48482	1	PLA-P0AAQ/BUTTON/HOME/TP/BM	022-00000-25116
9	A65-00000-52455	1	MET-P0AAQ/LCD_GROUNDING_BAR_R	022-00000-52453
8	A65-00000-52454	1	MET-P0AAQ/LCD-GROUNDING-BAR-L	022-00000-52452
7	F88-00000-56820	6	SC-M03*08-03-B-ZP-SLV[R]	
6	F94-30135-30000	1	MET-STUD13MM5TM3[R]	
5	I63-00000-49750	1	PLA-P0AAQ/LENS/TP	022-00000-37814
4	G52-00000-31661	6	PLA-P0AAQ/KNOB_DISPLAY/BK	022-00000-37817
3	I63-00000-49751	1	PLA-P0AAQ/HOUSING/BK	022-00000-25111
2	F87-00200-10103	1	MI-I00172P/RUBBER_BUSHING[R]	022-02000-36801
1	A65-00000-25218	1	MET-P0AAQ/DISPLAY_MOUNT	022-00000-25219

MECHANICAL PARTS LIST

All information (including drawings and diagrams) contained in this document is the property of MUSIC GROUP LTD. Addressees where the information is confided to shall maintain the information in confidence and shall not release it to any unauthorized third parties (except under attorney client privilege or under appropriate confidentiality agreements). Any unauthorized disclosure, use, application or any other dealings in the information shall result in civil and/or (where applicable) criminal liabilities and penalties.

MUSIC GROUP

PROJECT: P0AAQ	DRAWN: JERRY YAN	DESCRIPTION: DISPLAY ASSEMBLY	
MATERIAL: N/A	CHECKED: HUA MING YE		
	APPROVED: SHIRLEY XIAO	SIZE: A2	DRAWING NUMBER: 014-00000-49302 REV: A
FINISH: N/A	DATE: 4/3/2012	SCALE N T S	SHEET 1 OF 1

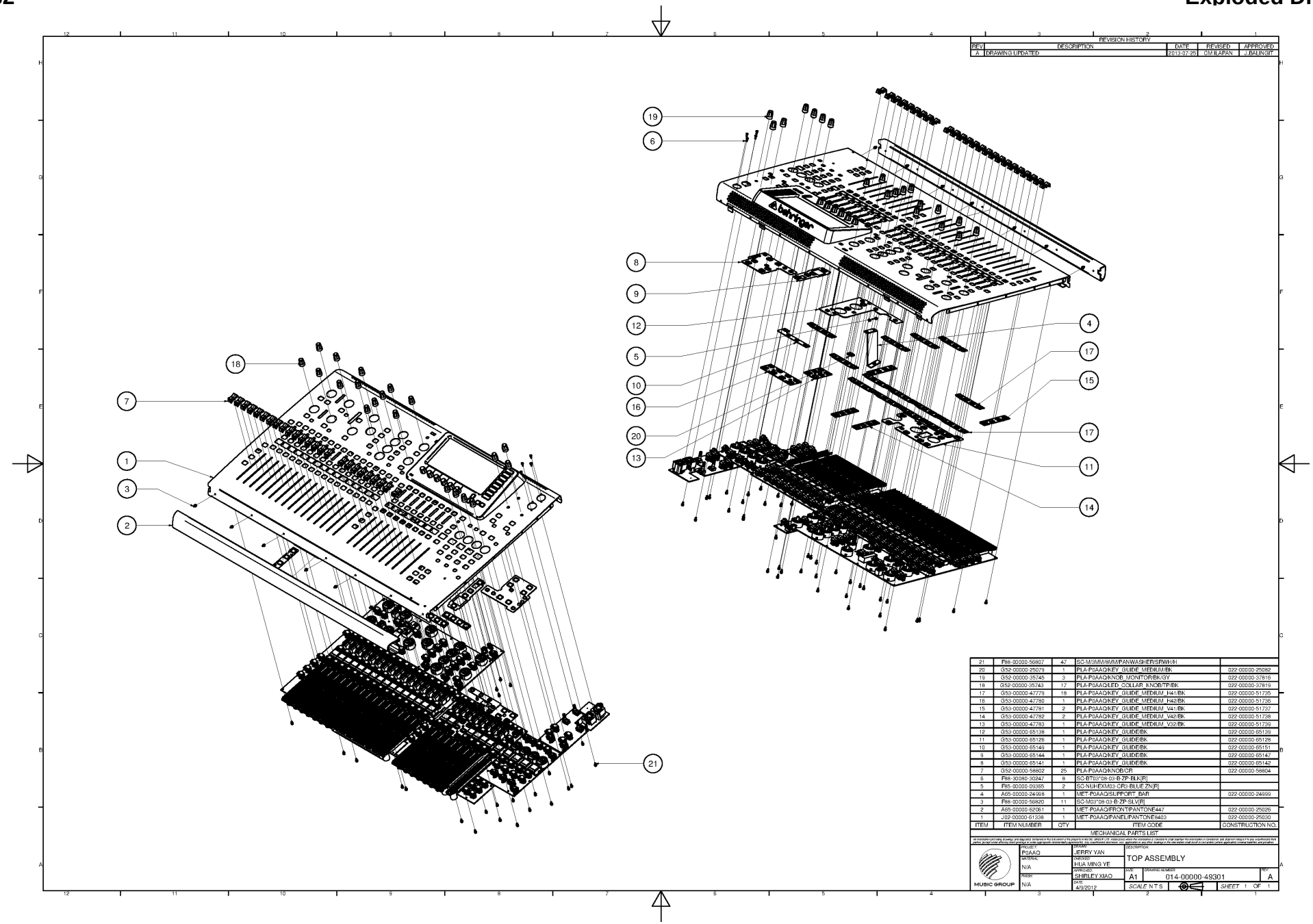

REVISION HISTORY

REV	DESCRIPTION	DATE	REVISED	APPROVED
A	DRAWING UPDATED	2013-07-25	CM ILAPAN	J.BAUNGIT

ITEM	ITEM NUMBER	QTY	ITEM CODE	CONSTRUCTION NO.
21	F88-00000-56807	47	SC-M/3MM/8MM/PANWASHER/SRWH/H	
20	G52-00000-25079	1	PLA-P0AAQ/KEY_GUIDE_MEDIUM/BK	022-00000-25082
19	G52-00000-35745	3	PLA-P0AAQ/KNOB_MONITOR/BK/GY	022-00000-37816
18	G52-00000-35743	17	PLA-P0AAQ/LED_COLLAR_KNOB/TP/BK	022-00000-37819
17	G53-00000-47779	18	PLA-P0AAQ/KEY_GUIDE_MEDIUM_H41/BK	022-00000-51735
16	G53-00000-47780	1	PLA-P0AAQ/KEY_GUIDE_MEDIUM_H42/BK	022-00000-51736
15	G53-00000-47781	2	PLA-P0AAQ/KEY_GUIDE_MEDIUM_V41/BK	022-00000-51737
14	G53-00000-47782	2	PLA-P0AAQ/KEY_GUIDE_MEDIUM_V42/BK	022-00000-51738
13	G53-00000-47783	1	PLA-P0AAQ/KEY_GUIDE_MEDIUM_V52/BK	022-00000-51739
12	G53-00000-65138	1	PLA-P0AAQ/KEY_GUIDE/BK	022-00000-65139
11	G53-00000-65126	1	PLA-P0AAQ/KEY_GUIDE/BK	022-00000-65128
10	G53-00000-65149	1	PLA-P0AAQ/KEY_GUIDE/BK	022-00000-65151
9	G53-00000-65144	1	PLA-P0AAQ/KEY_GUIDE/BK	022-00000-65147
8	G53-00000-65141	1	PLA-P0AAQ/KEY_GUIDE/BK	022-00000-65142
7	G52-00000-56802	25	PLA-P0AAQ/KNOB/GR	022-00000-56804
6	F88-30080-30247	8	SC-BT$3*D8-03-B-ZP-BLK[R]	
5	F85-00000-09365	2	SC-NUI/HEXM03-0R3-BLUE ZN[R]	
4	A65-00000-24998	1	MET-P0AAQ/SUPPORT_BAR	022-00000-24999
3	F88-00000-56820	11	SC-M03*D8-03-B-ZP-SLV[R]	
2	A65-00000-62061	1	MET-P0AAQ/FRONTPANTONE447	022-00000-25026
1	J02-00000-61338	1	MET-P0AAQ/PANELPANTONE6403	022-00000-25030

MECHANICAL PARTS LIST

All information, drawings, diagrams and diagrams contained in this document are the property of MUSIC Group, Inc. and cannot under the circumstances, or reproduced in whole or in part, nor disclosed to other third parties, except under express third parties or under appropriate confidentiality agreements, nor used for unauthorized purposes, nor applications or any other drawings in the interpretation shall not of or in part without express written authorization, criminal liability and penalties.

MUSIC GROUP

PROJECT: P0AAQ	DRAWN: JERRY YAN	DESCRIPTION: TOP ASSEMBLY	
MATERIAL: N/A	CHECKED: HUA MING YE		
FINISH: N/A	APPROVED: SHIRLEY XIAO	SIZE: A1	DRAWING NUMBER: 014-00000-49301 REV: A
	DATE: 4/9/2012	SCALE N.T.S	SHEET 1 OF 1

REVISION HISTORY				
REV	DESCRIPTION	DATE	REVISED	APPROVED
A	DRAWING UPDATED	2013-06-17	CM ILAPAN	J.BALINGIT

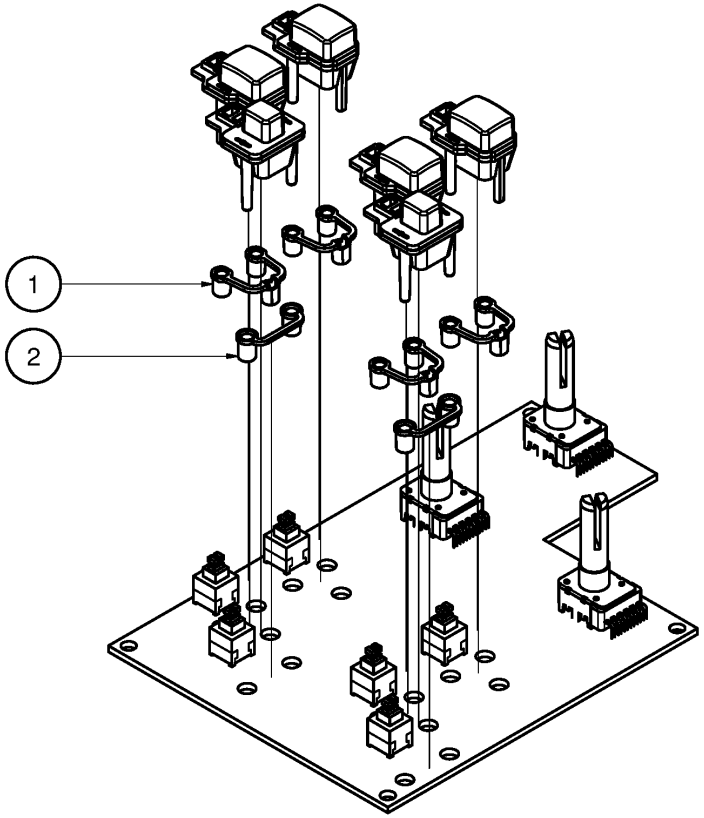

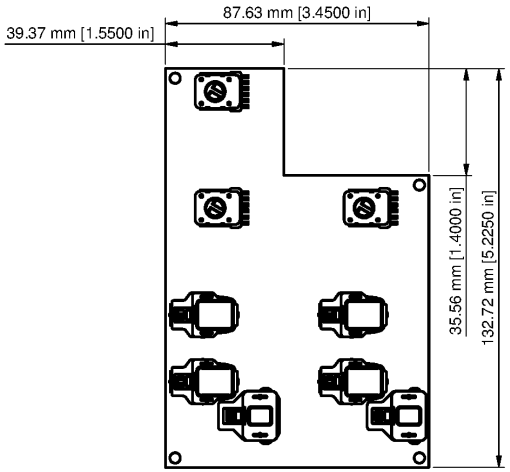

ITEM	ITEM NUMBER	QTY	ITEM CODE	CONSTRUCTION NO.
2	G58-00100-11292	2	PLA-P0784/PUSHKNOB_PCBGUIDESMALL[R]	022-02000-40084
1	G58-00000-31469	4	PLA-P0AB3/GUIDE/WH	022-00000-31472

MECHANICAL PARTS LIST

All information (including drawings and diagrams) contained in this document is the property of MUSIC GROUP LTD. Addressees whom the information is confided to shall maintain the information in confidence and shall not release it to any unauthorized third parties (except under attorney client privilege or under appropriate confidentiality agreements). Any unauthorized disclosure, use, application or any other dealings in the information shall result in civil and/or (where applicable) criminal liabilities and penalties.

MUSIC GROUP

PROJECT: P0AAQ	DRAWN: JERRY YAN	DESCRIPTION: PCB11 ASSEMBLY	
MATERIAL: N/A	CHECKED: HUA MING YE		
FINISH: N/A	APPROVED: SHIRLEY XIAO	SIZE: A3	DRAWING NUMBER: 014-00000-49309 — REV: A
	DATE: 4/5/2012	SCALE N T S	SHEET 1 OF 1

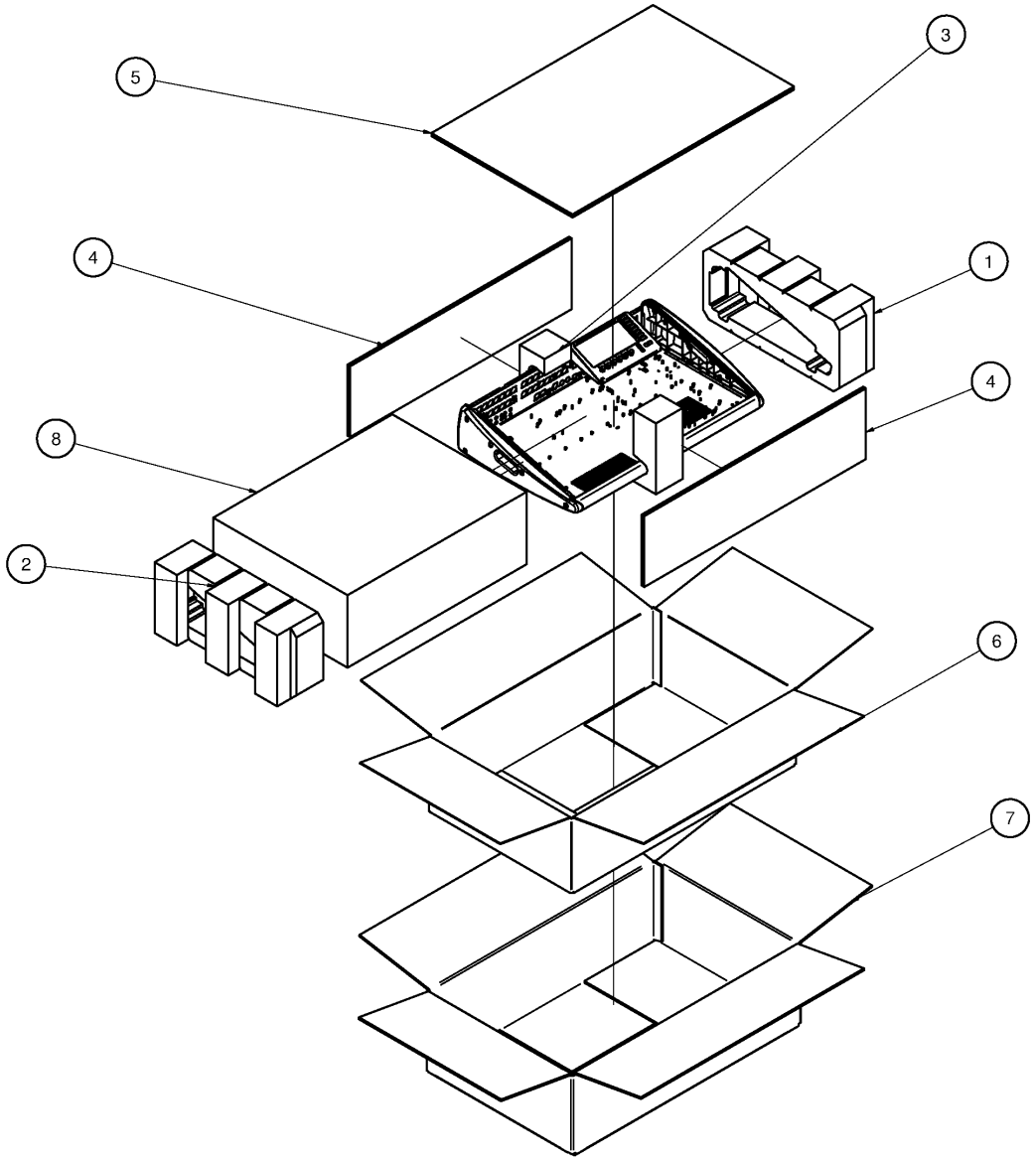

REVISION HISTORY

REV	DESCRIPTION	DATE	REVISED	APPROVED
A	DRAWING RELEASE	2012-03-27	GX.WU	SHIRLEY.XIAO

ITEM	ITEM NUMBER	QTY	ITEM CODE	CONSTRUCTION NO.
8	G28-20350-50016	1	PE BAG;SIZE:35in*50in;06PE;W/WARNING;ROHS	
7	I40-00000-55230	1	MASTER CARTON;P0AAQ;MACA;A001;ROHS	
6	I46-00000-55237	1	GIFTBOX;P0AAQ;GIBO;A001;ROHS	
5	G30-00000-48628	1	CARTON SHEET;P0AAQ;K=A, 2 PLY, BC FLUTE;TOP;ROHS	
4	G30-00000-52666	2	CARTON SHEET;P0AAQ;FRONT/REAR;ROHS	
3	G33-00000-48627	1	EXPANDED PE;P0AAQ;EPE 40T;CENTER;ROHS	
2	G33-00000-48625	1	EXPANDED PE;P0AAQ;EPE 40T;LEFT;ROHS	
1	G33-00000-48626	1	EXPANDED PE;P0AAQ;REAR;EPE 40T;RIGHT;ROHS	

MECHANICAL PARTS LIST

All information (including drawings and diagrams) contained in this document is the property of MUSIC GROUP LTD. Addressees where the information is confided to shall maintain the information in confidence and shall not release it to any unauthorized third parties (except under attorney client privilege or under appropriate confidentiality agreements). Any unauthorized disclosure, use, application or any other dealings in the information shall result in civil and/or (where applicable) criminal liabilities and penalties.

MUSIC GROUP

PROJECT: P0AAQ
MATERIAL: NA
FINISH: NA
DRAWN: GX.WU
CHECKED: HUA MING.YE
APPROVED: SHIRLEY.XIAO
DATE: 2012-03-27
DESCRIPTION: P0AAQ-PACKAGING ASSM-REVA
SIZE: A2
DRAWING NUMBER: 014-00000-54431
REV: A
SCALE 1 : 10
SHEET 1 OF 1

REVISION HISTORY				
REV	DESCRIPTION	DATE	REVISED	APPROVED
A	DRAWING UPDATED	2013-06-19	CM ILAPAN	J.BALINGIT

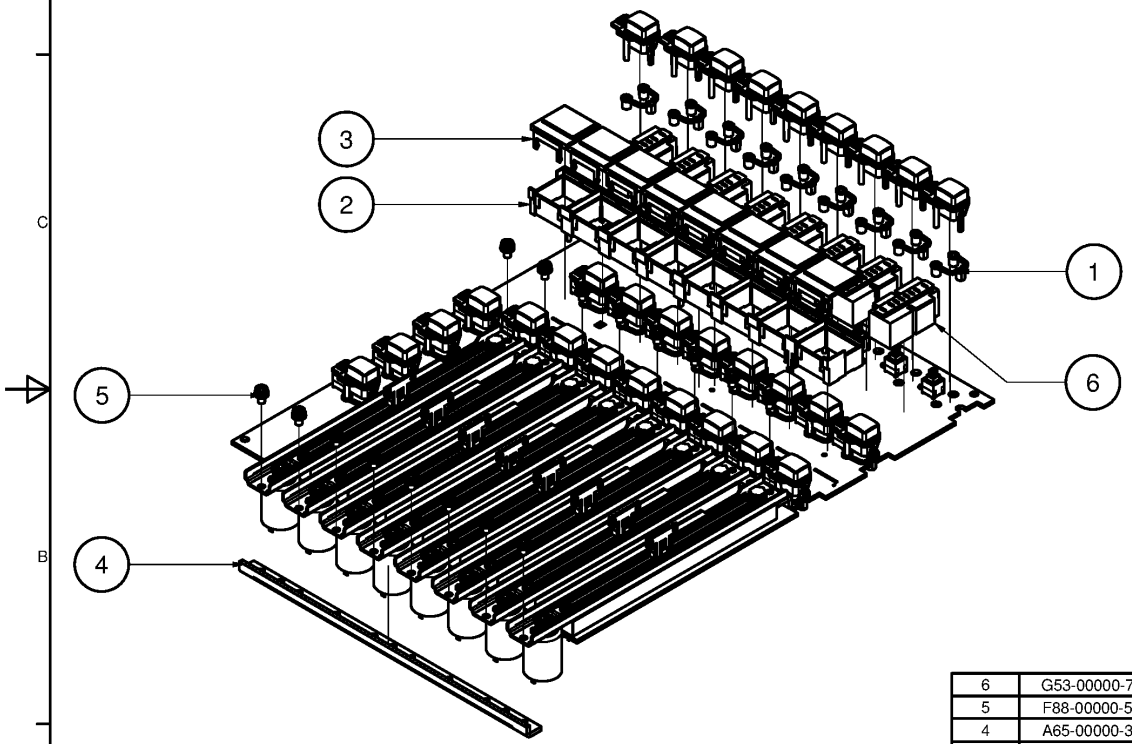

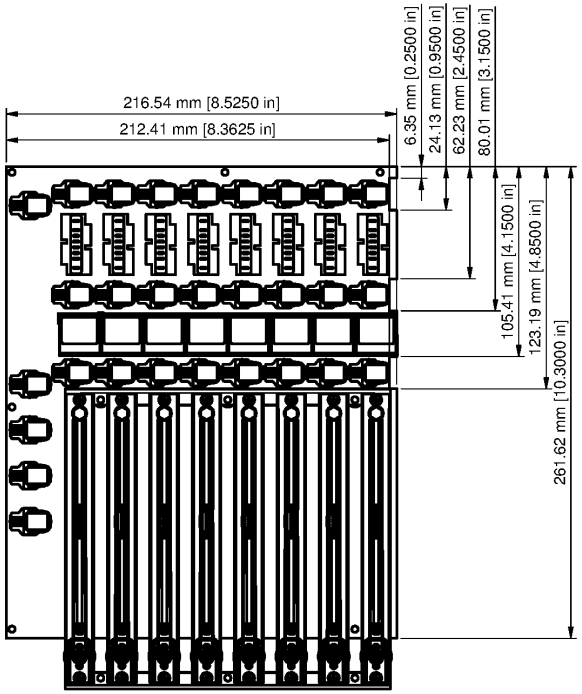

ITEM	ITEM NUMBER	QTY	ITEM CODE	CONSTRUCTION NO.
6	G53-00000-77640	8	PLA-P0AAQ/LED_METER/BK	022-00000-77635
5	F88-00000-56820	16	SC-M03*08-03-B-ZP-SLV[R]	
4	A65-00000-37710	2	MET-P0AAQ/-FADER_BRACKET	022-00000-37805
3	G54-00000-37713	8	PLA-P0AAQ/LCD_LENS_FLAT	022-00000-37968
2	G53-00000-17757	1	PLA-P0AAQ/LCD_HOLDER_CHANNEL8/BK	022-00000-24597
1	G58-00000-31469	29	PLA-P0AB3/GUIDE/WH	022-00000-31472

MECHANICAL PARTS LIST

All information (including drawings and diagrams) contained in this document is the property of MUSIC GROUP LTD. Addressees whom the information is confided to shall maintain the information in confidence and shall not release it to any unauthorized third parties (except under attorney client privilege or under appropriate confidentiality agreements). Any unauthorized disclosure, use, application or any other dealings in the information shall result in civil and/or (where applicable) criminal liabilities and penalties.

MUSIC GROUP

PROJECT: P0AAQ	DRAWN: JERRY YAN	DESCRIPTION: PCB06 ASSEMBLY	
MATERIAL: N/A	CHECKED: HUA MING YE		
FINISH: N/A	APPROVED: SHIRLEY XIAO	SIZE: A3	DRAWING NUMBER: 014-00000-49304 — REV: A
	DATE: 4/5/2012	SCALE N T S	SHEET 1 OF 1

REVISION HISTORY				
REV	DESCRIPTION	DATE	REVISED	APPROVED
A	Drawing release	2012-04-09	Jerry.Yan	Shirley.Xiao

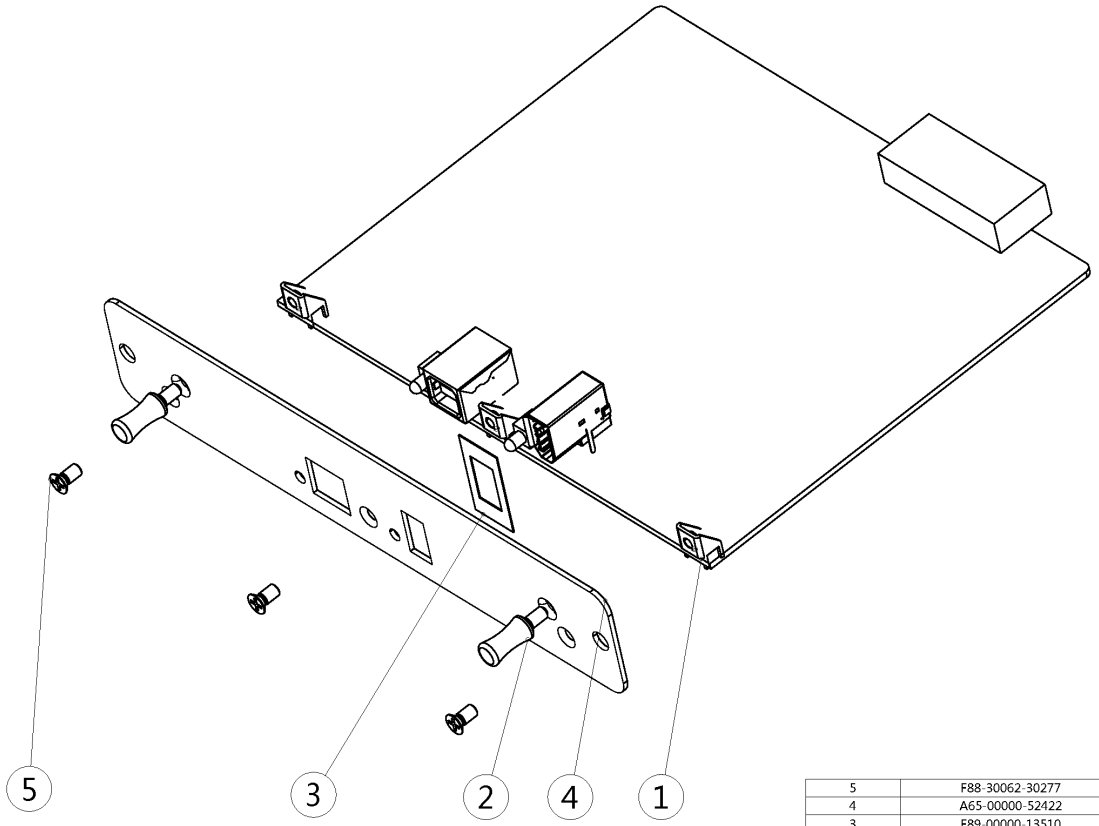

ITEM	ITEM NUMBER	QTY	ITEM CODE	CONSTRUCTION NUMBER
5	F88-30062-30277	3	SC-M03*06*50-05-52-B-ZP-BLK[R]	F88-30062-30277
4	A65-00000-52422	1	P0AQK-COVER-REVA	022-00000-52421
3	F89-00000-13510	1	N-P0AQK/SHIELDING_PC_SHEET[R]	022-00000-13485
2	A65-00000-06911	2	MET-P0ACL/DRAW_PULL[R]	022-00000-06909
1	A65-00000-24959	3	MET-P0274/MOUN/PLATING TINT[R]	022-01000-28916

All information (including drawings and diagrams) contained in this document is the property of MUSIC GROUP LTD. Addressees whom the information is confided to shall maintain the information in confidence and shall not release it to any unauthorized third parties (except under attorney client privilege or under appropriate confidentiality agreements). Any unauthorized disclosure, use, application or any other dealings in the information shall result in civil and/or (where applicable) criminal liabilities and penalties.

MUSIC GROUP

PROJECT: P0AQK
MATERIAL:
FINISH:
DRAWN: Jerry.Yan
CHECKED: HuaMing.Ye
APPROVED: Shirley.Xiao
DATE: 2012-04-09
DESCRIPTION: P0AQK-EXP
SIZE: A3
DRAWING NUMBER: 014-00000-52447
REV.
SCALE 1:2
SHEET 1 OF 1

REVISION HISTORY				
REV	DESCRIPTION	DATE	REVISED	APPROVED
A	DRAWING UPDATED	2013-06-18	CM ILAPAN	J.BALINGIT

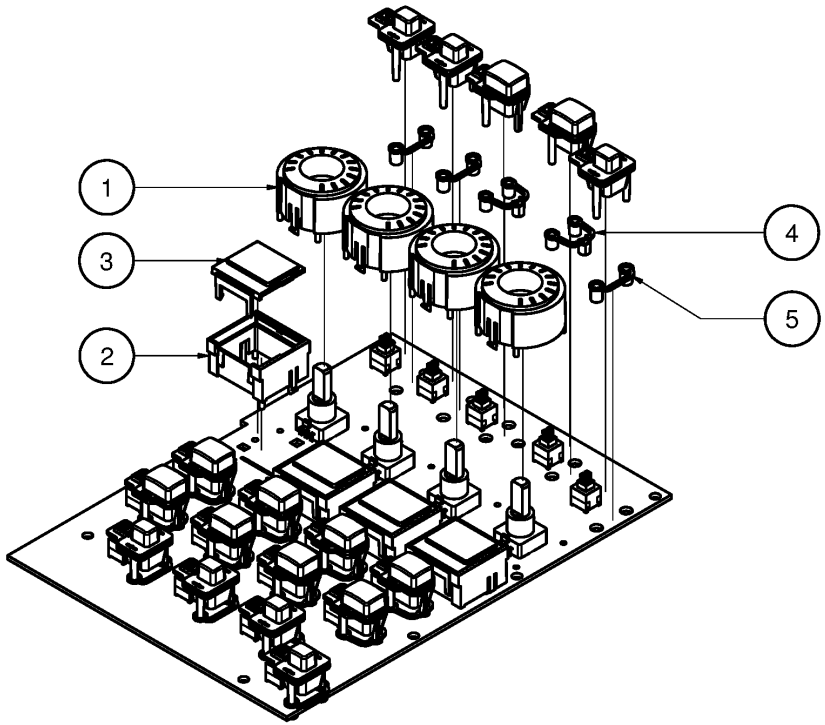

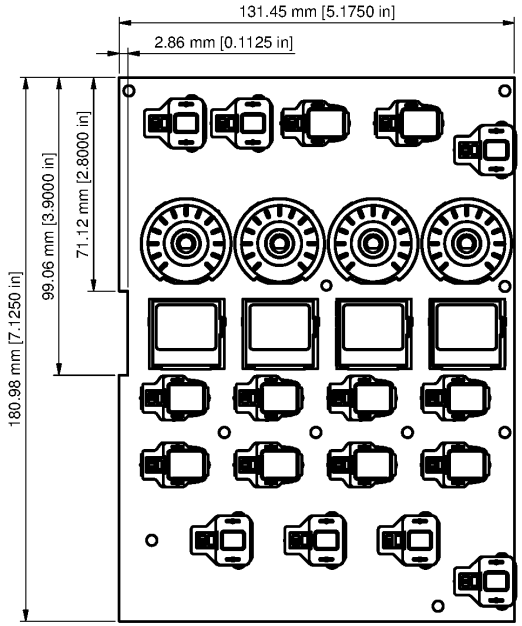

ITEM	ITEM NUMBER	QTY	ITEM CODE	CONSTRUCTION NO.
5	G58-00100-11292	7	PLA-P0784/PUSHKNOB_PCBGUIDESMALL[R]	022-02000-40084
4	G58-00000-31469	10	PLA-P0AB3/GUIDE/WH	022-00000-31472
3	G54-00000-37713	4	PLA-P0AAQ/LCD_LENS_FLAT	022-00000-37968
2	G53-00000-17755	4	PLA-P0AAQ/LCD_HOLDER_SINGLE/BK	022-00000-24598
1	G53-00000-23171	4	PLA-P0AAQ/LED_COLLAR/BK	022-00000-23170

MECHANICAL PARTS LIST

All information (including drawings and diagrams) contained in this document is the property of MUSIC GROUP LTD. Addressees whom the information is confided to shall maintain the information in confidence and shall not release it to any unauthorized third parties (except under attorney client privilege or under appropriate confidentiality agreements). Any unauthorized disclosure, use, application or any other dealings in the information shall result in civil and/or (where applicable) criminal liabilities and penalties.

MUSIC GROUP

PROJECT: P0AAQ	DRAWN: JERRY YAN	DESCRIPTION: PCB13 ASSEMBLY	
MATERIAL: N/A	CHECKED: HUA MING YE		
FINISH: N/A	APPROVED: SHIRLEY XIAO	SIZE: A3	DRAWING NUMBER: 014-00000-49307 — REV: A
	DATE: 4/5/2012	SCALE N T S	SHEET 1 OF 1

REVISION HISTORY				
REV	DESCRIPTION	DATE	REVISED	APPROVED
A	DRAWING UPDATED	2013-06-19	CM ILAPAN	J.BALINGIT

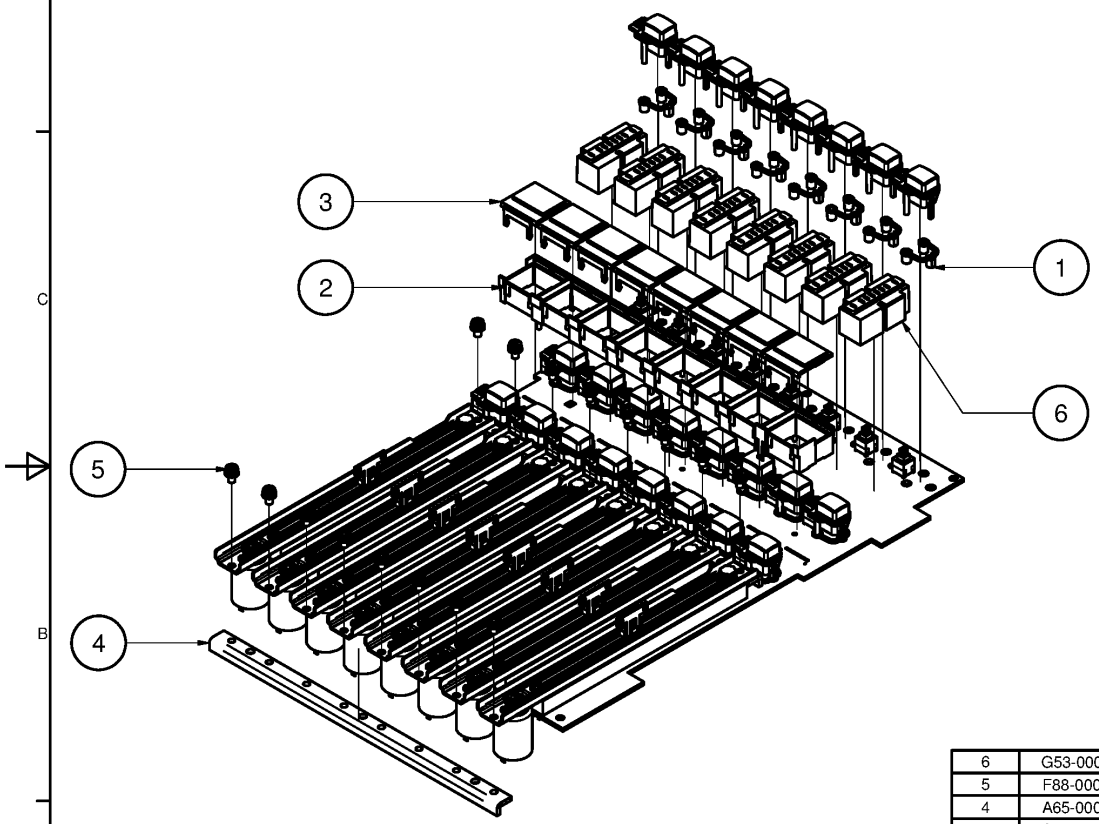

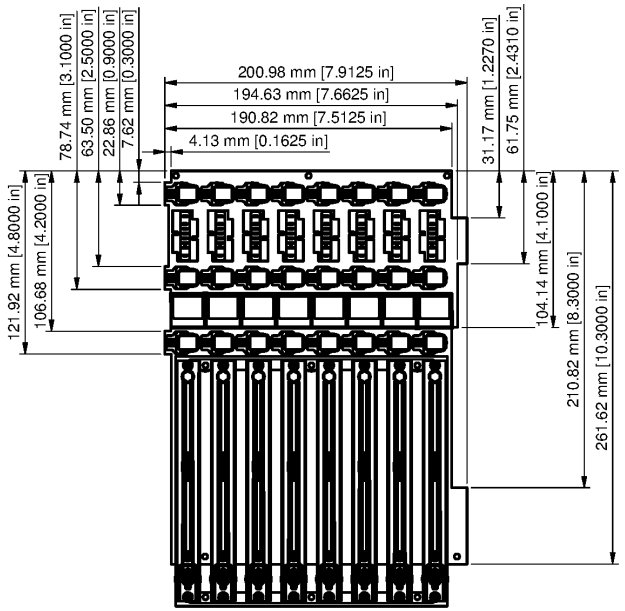

ITEM	ITEM NUMBER	QTY	ITEM CODE	CONSTRUCTION NO.
6	G53-00000-77640	8	PLA-P0AAQ/LED_METER/BK	022-00000-77635
5	F88-00000-56820	16	SC-M03*08-03-B-ZP-SLV[R]	
4	A65-00000-37710	2	MET-P0AAQ/-FADER_BRACKET	022-00000-37805
3	G54-00000-37713	8	PLA-P0AAQ/LCD_LENS_FLAT	022-00000-37968
2	G53-00000-17757	1	PLA-P0AAQ/LCD_HOLDER_CHANNEL8/BK	022-00000-24597
1	G58-00000-31469	24	PLA-P0AB3/GUIDE/WH	022-00000-31472

MECHANICAL PARTS LIST

All information (including drawings and diagrams) contained in this document is the property of MUSIC GROUP LTD. Addressees whom the information is confided to shall maintain the information in confidence and shall not release it to any unauthorized third parties (except under attorney client privilege or under appropriate confidentiality agreements). Any unauthorized disclosure, use, application or any other dealings in the information shall result in civil and/or (where applicable) criminal liabilities and penalties.

MUSIC GROUP

PROJECT: P0AAQ	DRAWN: JERRY YAN	DESCRIPTION: PCB07 ASSEMBLY	
MATERIAL: N/A	CHECKED: HUA MING YE		
FINISH: N/A	APPROVED: SHIRLEY XIAO	SIZE: A3	DRAWING NUMBER: 014-00000-49305 — REV: A
	DATE: 4/5/2012	SCALE N T S	SHEET 1 OF 1

REVISION HISTORY				
REV	DESCRIPTION	DATE	REVISED	APPROVED
A	DRAWING UPDATED	2013-06-17	CM ILAPAN	J.BALINGIT

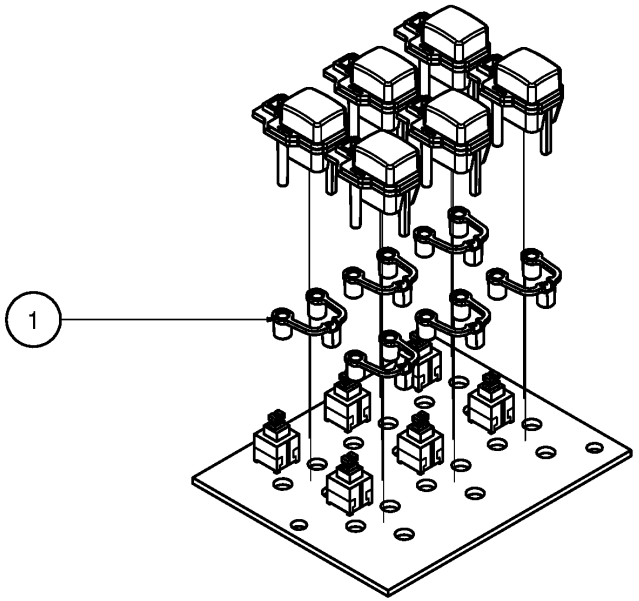

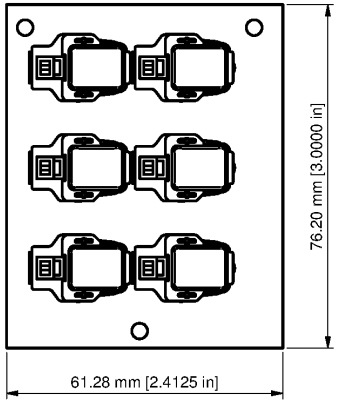

ITEM	ITEM NUMBER	QTY	ITEM CODE	CONSTRUCTION NO.
1	G58-00000-31469	6	PLA-P0AB3/GUIDE/WH	022-00000-31472

MECHANICAL PARTS LIST

All information (including drawings and diagrams) contained in this document is the property of MUSIC GROUP LTD. Addressees whom the information is confided to shall maintain the information in confidence and shall not release it to any unauthorized third parties (except under attorney client privilege or under appropriate confidentiality agreements). Any unauthorized disclosure, use, application or any other dealings in the information shall result in civil and/or (where applicable) criminal liabilities and penalties.

MUSIC GROUP

PROJECT: P0AAQ	DRAWN: JERRY YAN	DESCRIPTION: PCB14 ASSEMBLY	
MATERIAL: N/A	CHECKED: HUA MING YE		
FINISH: N/A	APPROVED: SHIRLEY XIAO	SIZE: A3	DRAWING NUMBER: 014-00000-49311 — REV: A
	DATE: 4/5/2012	SCALE N T S	SHEET 1 OF 1

REVISION HISTORY				
REV	DESCRIPTION	DATE	REVISED	APPROVED
A	DRAWING RELEASED	2013-06-18	CM ILAPAN	J.BALINGIT

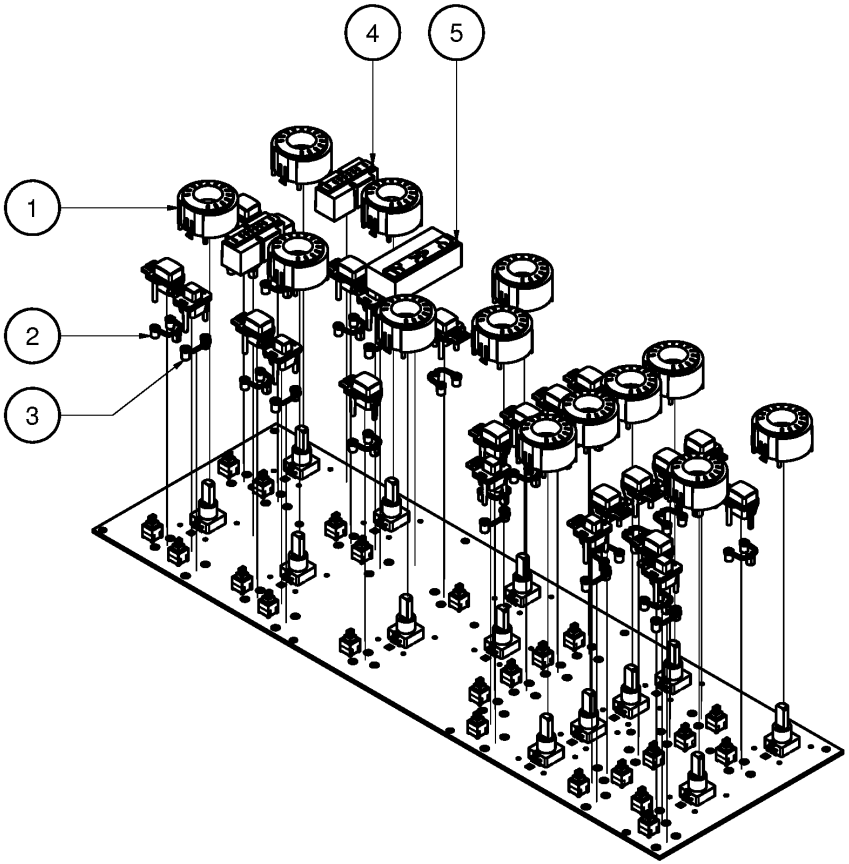

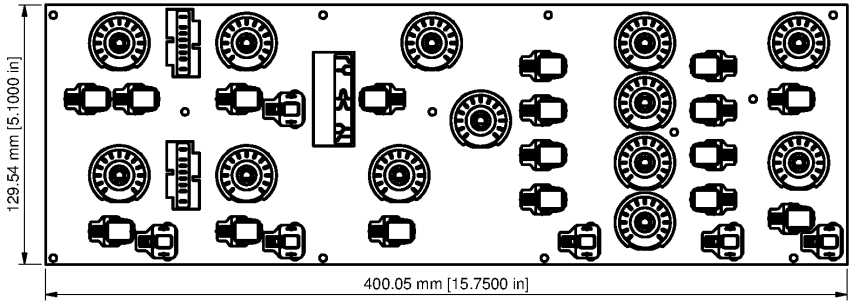

ITEM	ITEM NUMBER	QTY	ITEM CODE	CONSTRUCTION NO.
5	G53-00000-35748	1	PLA-P0AAQ/LED_METER_EQ/BK	022-00000-37812
4	G53-00000-77640	2	PLA-P0AAQ/LED_METER/BK	022-00000-77635
3	G58-00100-11292	6	PLA-P0784/PUSHKNOB_PCBGUIDESMALL[R]	022-02000-40084
2	G58-00000-31469	17	PLA-P0AB3/GUIDE/WH	022-00000-31472
1	G53-00000-23171	13	PLA-P0AAQ/LED_COLLAR/BK	022-00000-23170

MECHANICAL PARTS LIST

All information (including drawings and diagrams) contained in this document is the property of MUSIC GROUP LTD. Addressees whom the information is confided to shall maintain the information in confidence and shall not release it to any unauthorized third parties (except under attorney client privilege or under appropriate confidentiality agreements). Any unauthorized disclosure, use, application or any other dealings in the information shall result in civil and/or (where applicable) criminal liabilities and penalties.

MUSIC GROUP

PROJECT: P0AAQ	DRAWN: JERRY YAN	DESCRIPTION: PCB03 ASSEMBLY	
MATERIAL: N/A	CHECKED: YE HUA MING		
FINISH: N/A	APPROVED: SHIRLEY XIAO	SIZE: A3	DRAWING NUMBER: 014-00000-49308 — REV: A
	DATE: 4/5/2012	SCALE N T S	SHEET 1 OF 1

REVISION HISTORY

REV	DESCRIPTION	DATE	REVISED	APPROVED
A	DRAWING UPDATED	2013-06-17	CM ILAPAN	J.BALINGIT

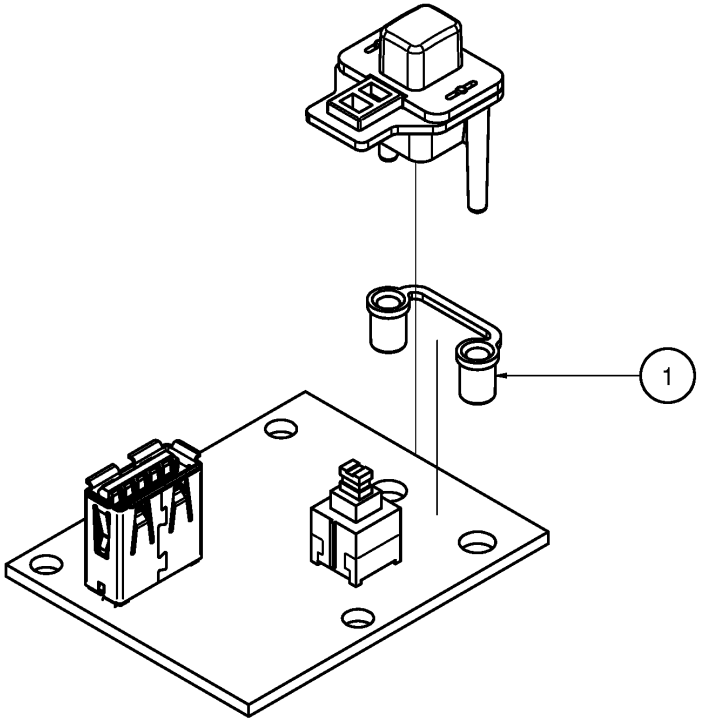

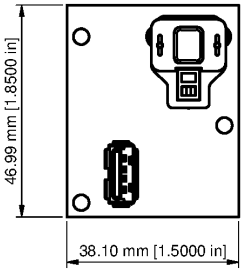

ITEM	ITEM NUMBER	QTY	ITEM CODE	CONSTRUCTION NO.
1	G58-00100-11292	1	PLA-P0784/PUSHKNOB_PCBGUIDESMALL[R]	022-02000-40084

MECHANICAL PARTS LIST

All information (including drawings and diagrams) contained in this document is the property of MUSIC GROUP LTD. Addressees whom the information is confided to shall maintain the information in confidence and shall not release it to any unauthorized third parties (except under attorney client privilege or under appropriate confidentiality agreements). Any unauthorized disclosure, use, application or any other dealings in the information shall result in civil and/or (where applicable) criminal liabilities and penalties.

MUSIC GROUP

PROJECT: P0AAQ	DRAWN: JERRY YAN	DESCRIPTION: PCB12 ASSEMBLY	
MATERIAL: N/A	CHECKED: HUA MING YE		
FINISH: N/A	APPROVED: SHIRLEY XIAO	SIZE: A3	DRAWING NUMBER: 014-00000-49310 — REV: A
	DATE: 4/5/2012	SCALE N T S	SHEET 1 OF 1

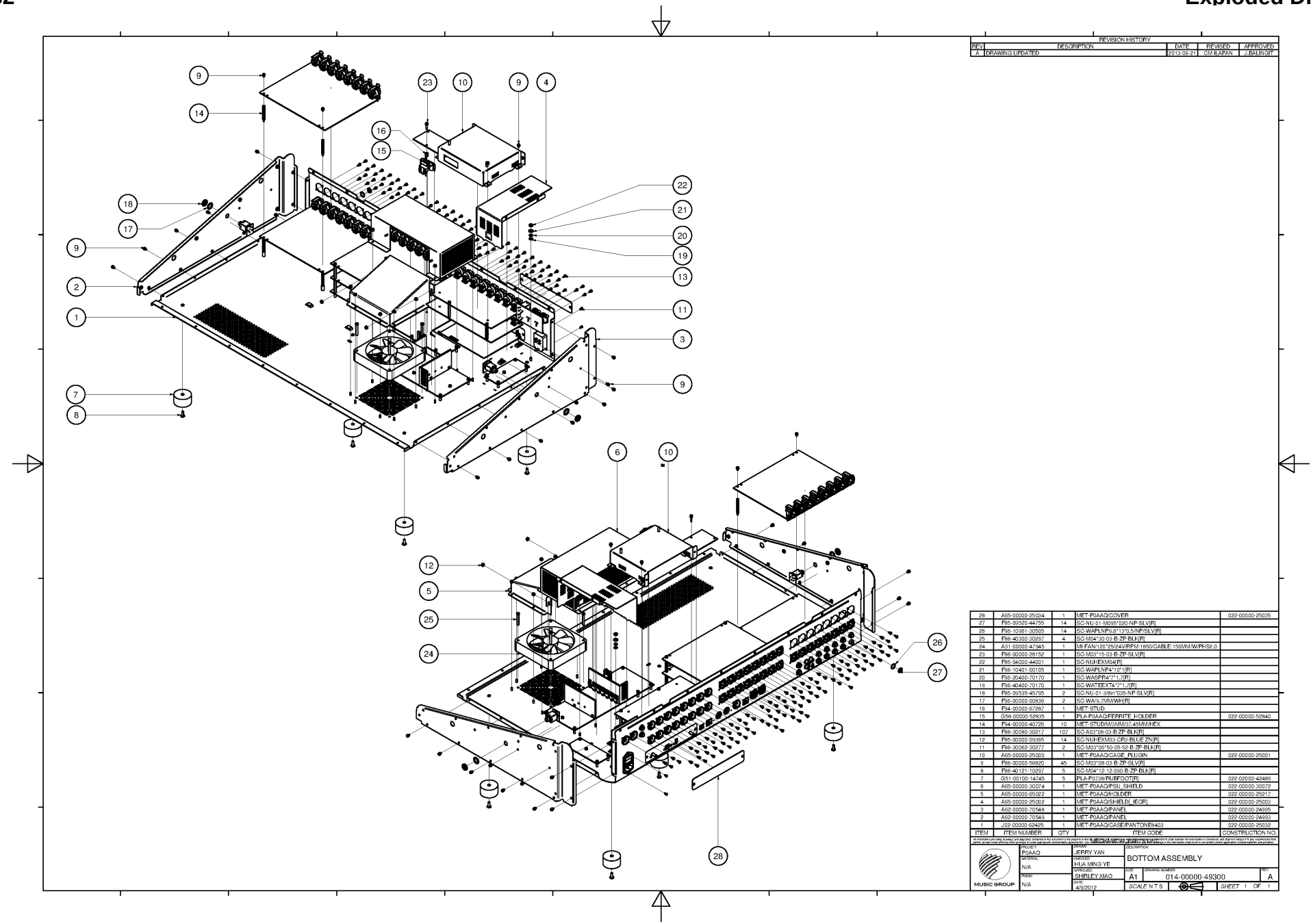

ITEM	ITEM NUMBER	QTY	ITEM CODE	CONSTRUCTION NO.
28	A65-00000-25034	1	MET-P0AAQ/COVER	022-00000-25035
27	F85-09520-44755	14	SC-NU-01-M095*020-NP-SLV[R]	
26	F56-10951-30505	14	SC-WAFLNP9.6*13*0.5/NP/SLV[R]	
25	F98-40300-30297	4	SC-M04*30-03-B-ZP-BLK[R]	
24	A31-00000-47945	1	MI-FAN*120*25/24V/RPM:1850/CABLE:150MM/WIPHS2.0	
23	F98-00000-28152	1	SC-M03*15-03-B-ZP-SLV[R]	
22	F85-04000-44001	1	SC-NUHEXM04[R]	
21	F56-10401-00105	1	SC-WAFLNP4*10*1[R]	
20	F56-20400-70170	1	SC-WASPR4*7*1.7[R]	
19	F56-40400-70170	1	SC-WATEEXT4*7*1.7[R]	
18	F85-09535-45795	2	SC-NU-01-3/8in*035-NP-SLV[R]	
17	F56-00000-00836	2	SC-WA/9.7/M/WH[R]	
16	F94-00000-67287	1	MET-STUD	
15	G58-00000-52835	1	PLA-P0AAQ/FERRITE_HOLDER	022-00000-52840
14	F94-00000-40726	10	MET-STUD/M3/M/37.45M/HEX	
13	F98-30080-30217	107	SC-A03*08-03-B-ZP-BLK[R]	
12	F85-00000-09365	14	SC-NUHEXM03-CR3-BLUE ZN[R]	
11	F98-30062-30277	2	SC-M03*06*50-05-52-B-ZP-BLK[R]	
10	A65-00000-25000	1	MET-P0AAQ/CAGE_PLUGIN	022-00000-25001
9	F98-00000-56920	45	SC-M03*08-03-B-ZP-SLV[R]	
8	F98-40121-10297	5	SC-M04*12-12-090-B-ZP-BLK[R]	
7	G51-00100-14745	5	PLA-P0739/RUBFOOT[R]	022-02000-42489
6	A65-00000-30074	1	MET-P0AAQ/PSU_SHIELD	022-00000-30072
5	A65-00000-65022	1	MET-P0AAQ/HOLDER	022-00000-25217
4	A65-00000-25002	1	MET-P0AAQ/SHIELD(_IEOR)	022-00000-25003
3	A62-00000-70548	1	MET-P0AAQ/PANEL	022-00000-24995
2	A62-00000-70549	1	MET-P0AAQ/PANEL	022-00000-24993
1	J02-00000-62425	1	MET-P0AAQ/CASE/PANTONE8403	022-00000-25032

All drawings, parts, models, and diagrams, designed or not, are owned by the company or are the property of the designer. Reproduction or copying of any drawing or part without written permission is strictly prohibited. Unauthorized use of these drawings or the information contained in them, and disclosure of any part or drawing to third parties, except under a formal client agreement or under appropriate confidentiality agreements, is prohibited. Violators will be held liable for all damages and losses incurred by the company as the result of such violation (where applicable) criminal liabilities and penalties.

REVISION HISTORY				
REV	DESCRIPTION	DATE	REVISED	APPROVED
A	DRAWING UPDATED	2013-06-18	CM ILAPAN	J.BALINGIT

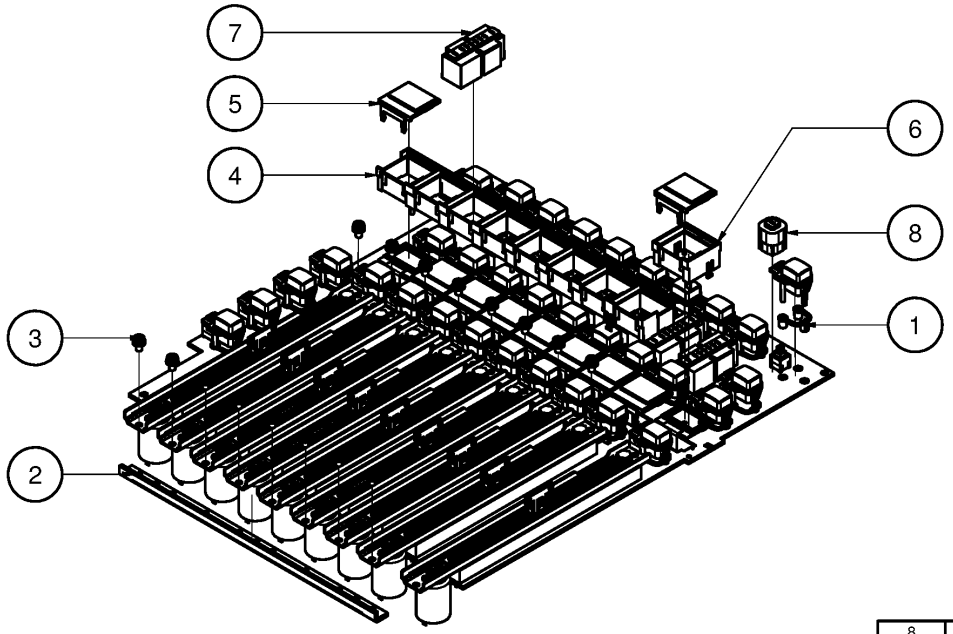

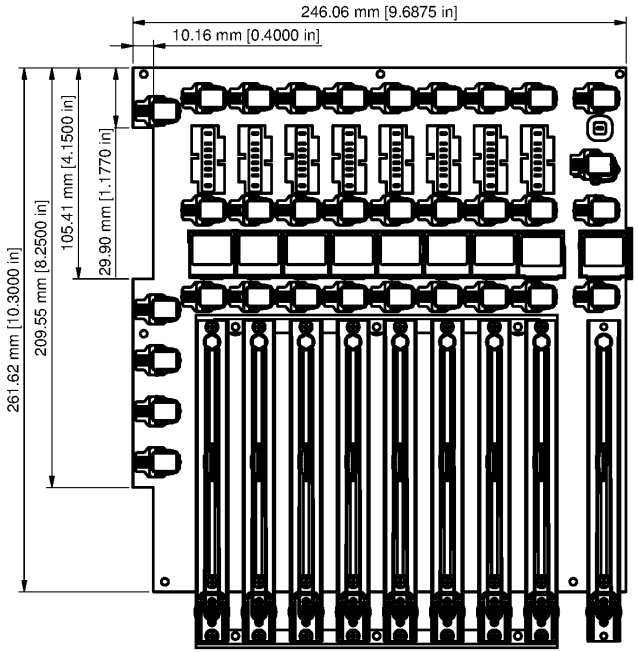

ITEM	ITEM NUMBER	QTY	ITEM CODE	CONSTRUCTION NO.
8	G53-00000-35749	1	PLA-P0AAQ/LED_METER_SINGLE/BK	022-00000-37813
7	G53-00000-77640	8	PLA-P0AAQ/LED_METER/BK	022-00000-77635
6	G53-00000-17755	1	PLA-P0AAQ/LCD_HOLDER_SINGLE/BK	022-00000-24598
5	G54-00000-37713	9	PLA-P0AAQ/LCD_LENS_FLAT	022-00000-37968
4	G53-00000-17757	1	PLA-P0AAQ/LCD_HOLDER_CHANNEL8/BK	022-00000-24597
3	F88-00000-56820	16	SC-M03*08-03-B-ZP-SLV[R]	
2	A65-00000-37710	2	MET-P0AAQ/-FADER_BRACKET	022-00000-37805
1	G58-00000-31469	33	PLA-P0AB3/GUIDE/WH	022-00000-31472

MECHANICAL PARTS LIST

All information (including drawings and diagrams) contained in this document is the property of MUSIC GROUP LTD. Addressees whom the information is confided to shall maintain the information in confidence and shall not release it to any unauthorized third parties (except under attorney client privilege or under appropriate confidentiality agreements). Any unauthorized disclosure, use, application or any other dealings in the information shall result in civil and/or (where applicable) criminal liabilities and penalties.

MUSIC GROUP

PROJECT: P0AAQ	DRAWN: JERRY YAN	DESCRIPTION: PCB08 ASSEMBLY	
MATERIAL: N/A	CHECKED: HUA MING YE		
FINISH: N/A	APPROVED: SHIRLEY XIAO	SIZE: A3	DRAWING NUMBER: 014-00000-49306 — REV: A
	DATE: 4/5/2012	SCALE N T S	SHEET 1 OF 1

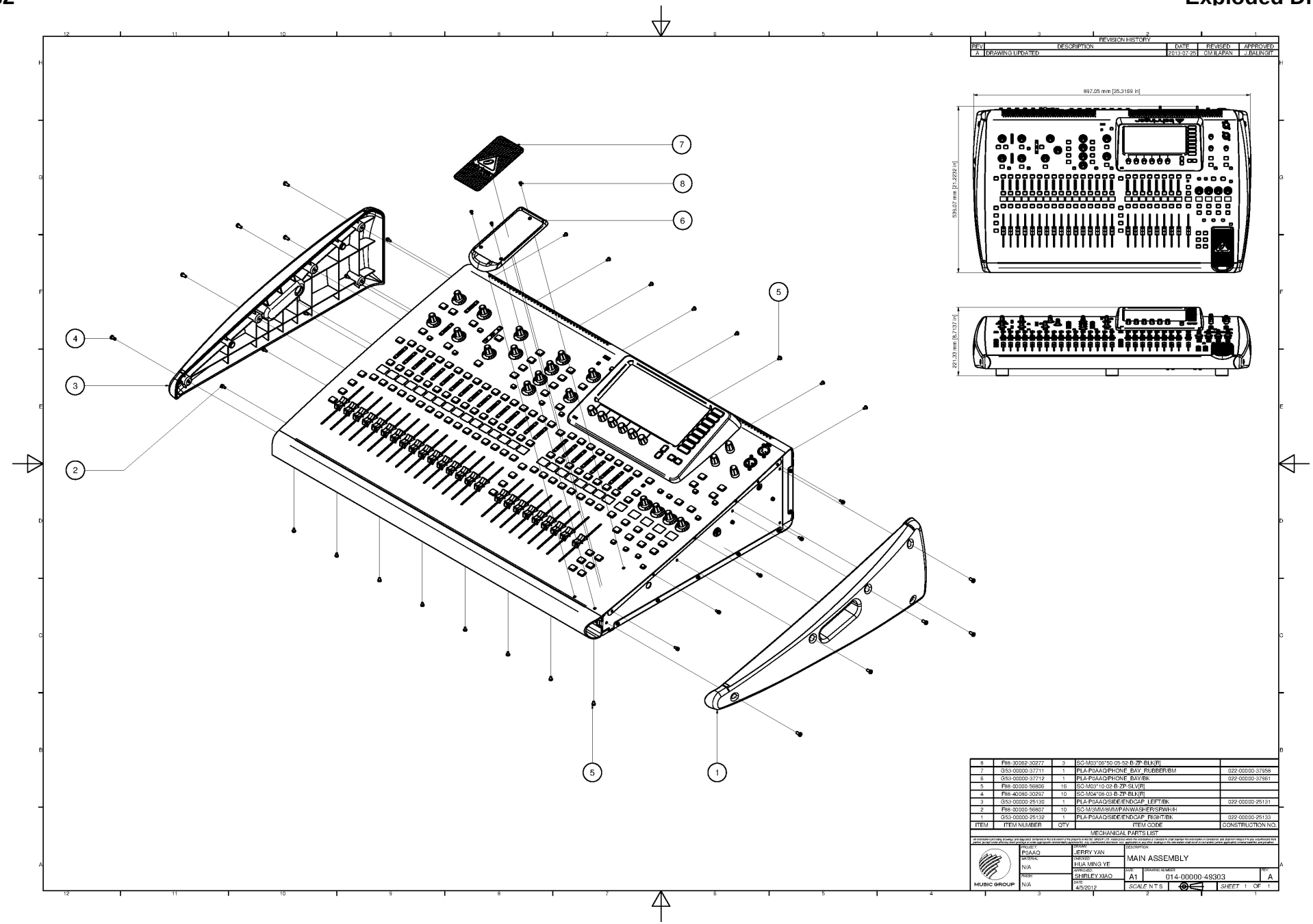
REVISION HISTORY
REV | DESCRIPTION | DATE | REVISED | APPROVED
A | DRAWING UPDATED | 2013-07-25 | CM ILAPAN | J.DAUNGIT
897.05 mm [35.3169 in]
539.27 mm [21.2232 in]
221.33 mm [8.7137 in]
8 | P88-30082-30277 | 3 | SC-M03*06*50-05-52-B-ZP-BLK[R]
7 | G53-00000-37711 | 1 | PLA-P0AAQ/PHONE_BAY_RUBBER/BM | 022-00000-37958
6 | G53-00000-37712 | 1 | PLA-P0AAQ/PHONE_BAY/BK | 022-00000-37961
5 | P88-00000-56806 | 16 | SC-M03*10-02-B-ZP-SLV[R]
4 | P88-40080-30297 | 10 | SC-M04*08-03-B-ZP-BLK[R]
3 | G53-00000-25130 | 1 | PLA-P0AAQ/SIDE/ENDCAP_LEFT/BK | 022-00000-25131
2 | P88-00000-56807 | 10 | SC-M3/M4/M5/M6/PAN/WASHER/SPWH/H
1 | G53-00000-25132 | 1 | PLA-P0AAQ/SIDE/ENDCAP_RIGHT/BK | 022-00000-25133
ITEM | ITEM NUMBER | QTY | ITEM CODE | CONSTRUCTION NO.
MECHANICAL PARTS LIST
MUSIC GROUP
PROJECT P0AAQ
MATERIAL N/A
FINISH N/A
DRAWN JERRY YAN
CHECKED HUA MING YE
APPROVED SHIRLEY XIAO
DATE 4/5/2012
DESCRIPTION MAIN ASSEMBLY
SIZE A1
DRAWING NUMBER 014-00000-49303
REV A
SCALE N.T.S
SHEET 1 OF 1

We Hear You

behringer.com

behringer